Candidate 3 evidence

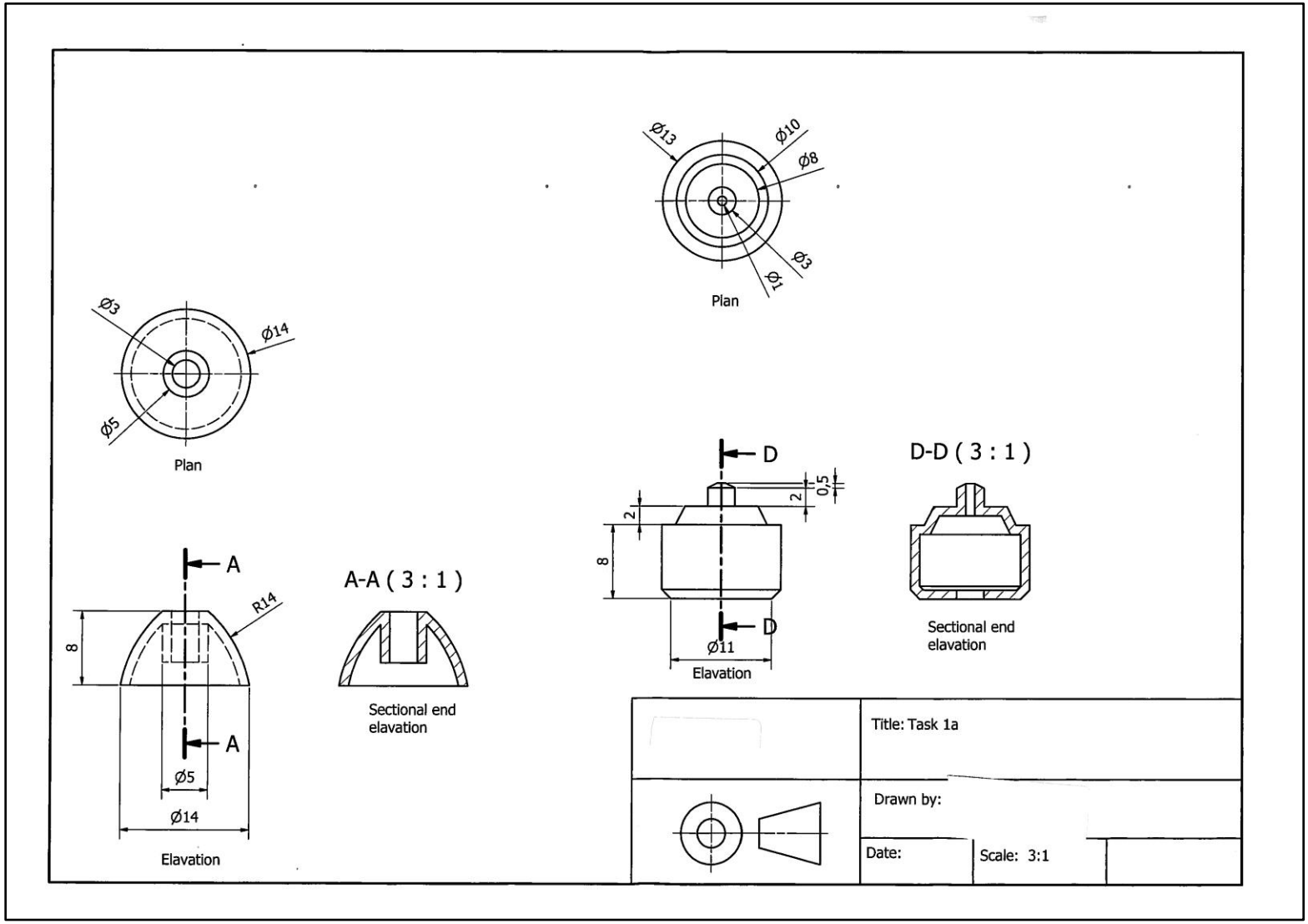

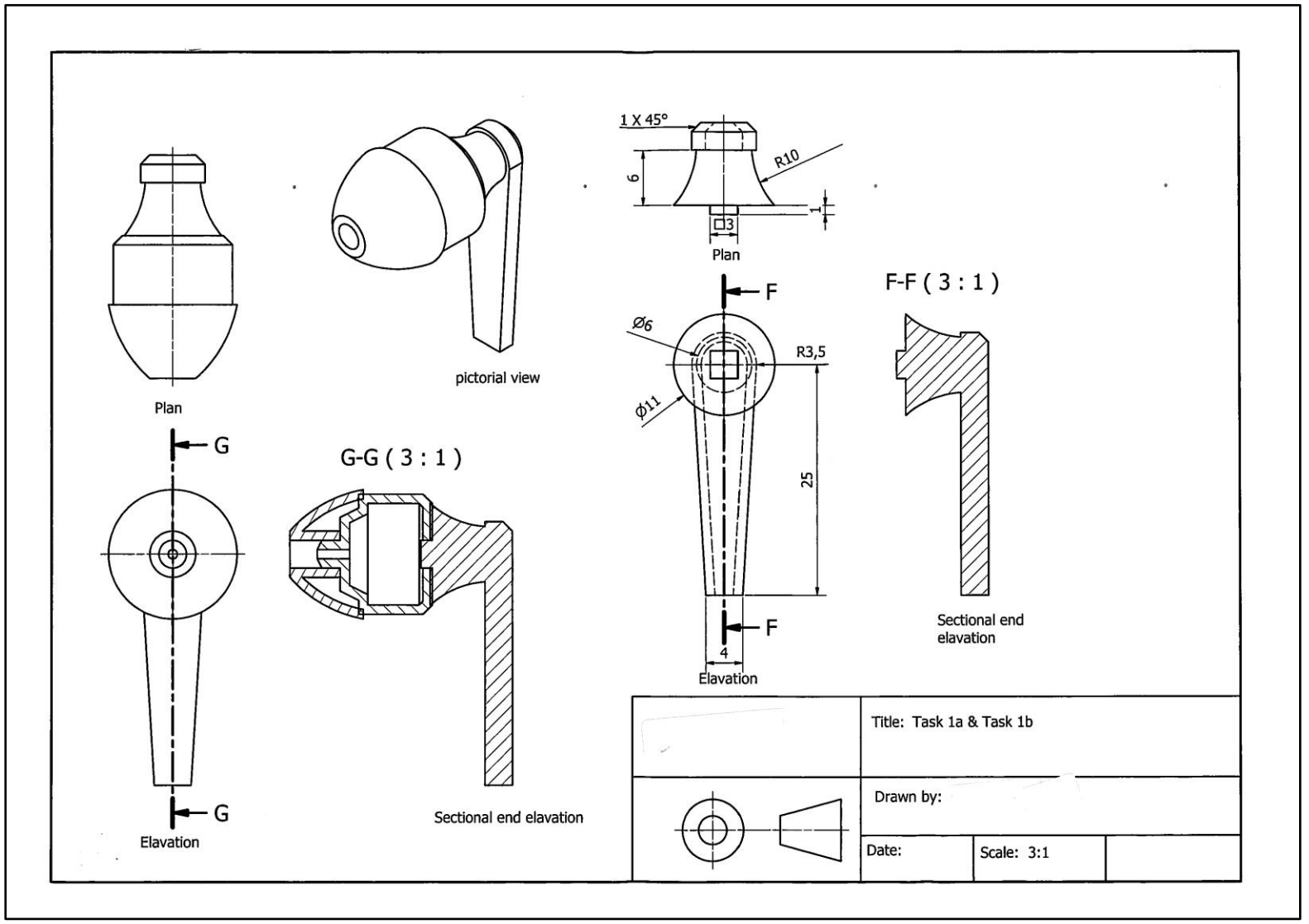
Plan
pictorial view
1 X 45°
R10
6
1
□3
Plan
F
Ø6
R3,5
Ø11
25
F
4
Elavation
F-F (3 : 1)
Sectional end elavation
G
G
Elavation
G-G (3 : 1)
Sectional end elavation
Title: Task 1a & Task 1b
Drawn by:
Date:
Scale: 3:1

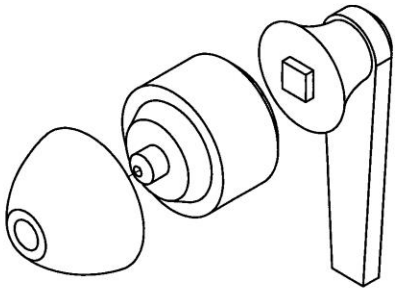

Exploded assembly

	Title: Task 1c
	Drawn by:
	Date: Scale: 3:1

Task 2a

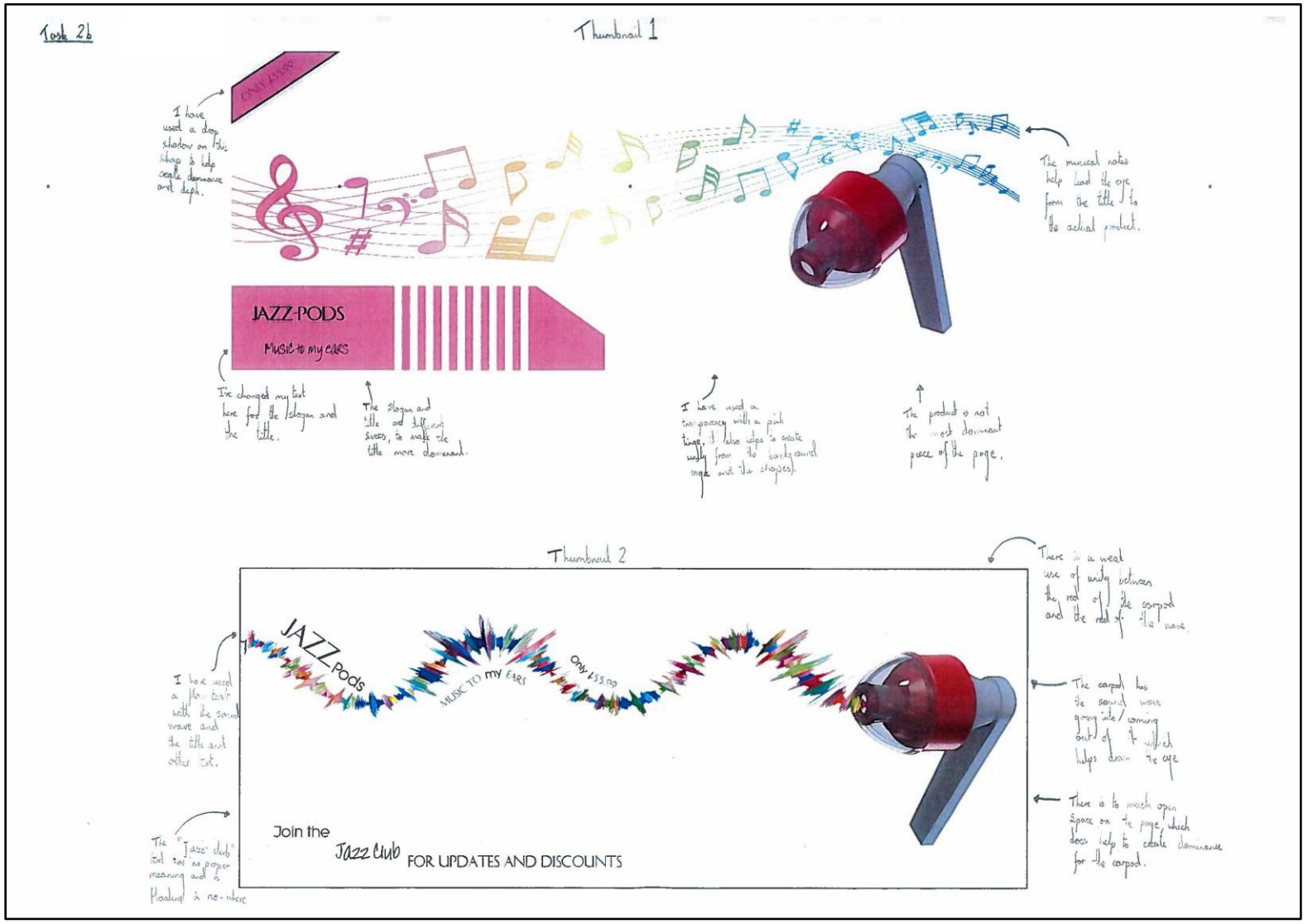
Task 2b
Thumbnail 1
ONLY £55.99
I have used a drop shadow on the shape to help create dominance and depth.
The musical notes help lead the eye from the title to the actual product.
JAZZ-PODS
Music to my ears
I've changed my text here for the slogan and the title.
The slogan and title are different sizes, to make the title more dominant.
I have used a transparency with a paint image, it also helps to create unity from the background image and the shapes).
The product is not the most dominant piece of the page.
Thumbnail 2
There is a weak use of unity between the rest of the earpod and the rest of the wave.
I have used a flo. text with the sound wave and the title and other text.
JAZZ Pods
MUSIC TO my EARS
ONLY £55.99
The earpod has the sound wave going into / coming out of it which helps draw the eye
There is to much open space on the page, which does help to create dominance for the earpod.
The "Jazz club" text has no proper meaning and is floating in no-where
Join the
Jazz Club
FOR UPDATES AND DISCOUNTS

Task 2c

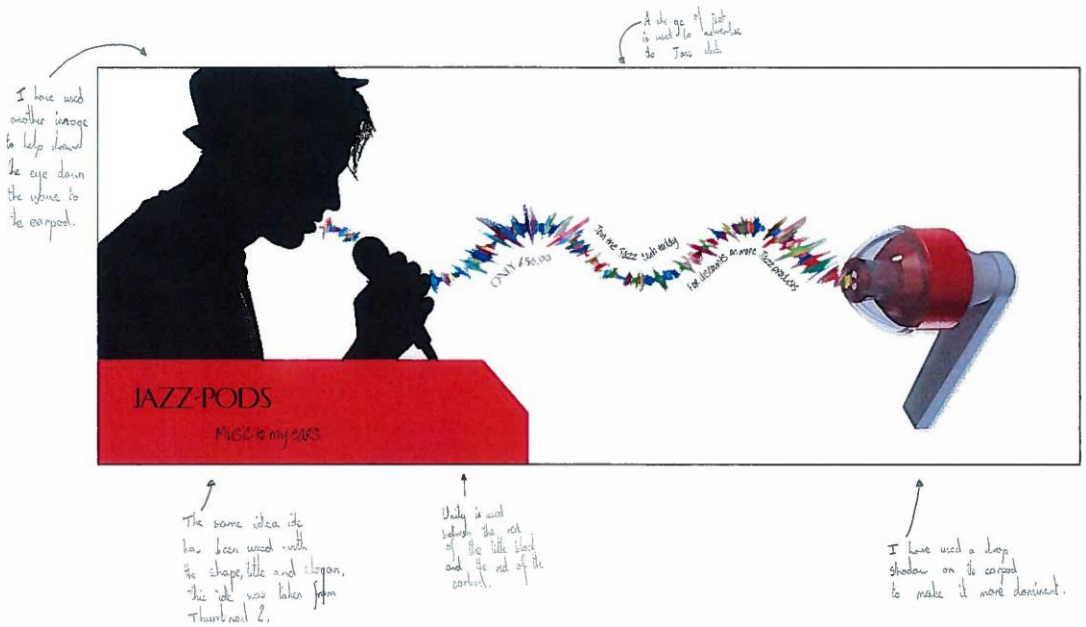
I have used another image to help draw the eye down the wave to the earpod.
A the age of just is used to advertise the Jazz club.
JAZZ-PODS
Music to my ears
ONLY £50.00
Join the Jazz club today
For distants on more Jazz products
The same idea idea has been used with the shape, title and slogan, this idea was taken from Thumbnail 2.
Unity is used between the red of the title block and the red of the earbud.
I have used a drop shadow on the earpod to make it more dominant.

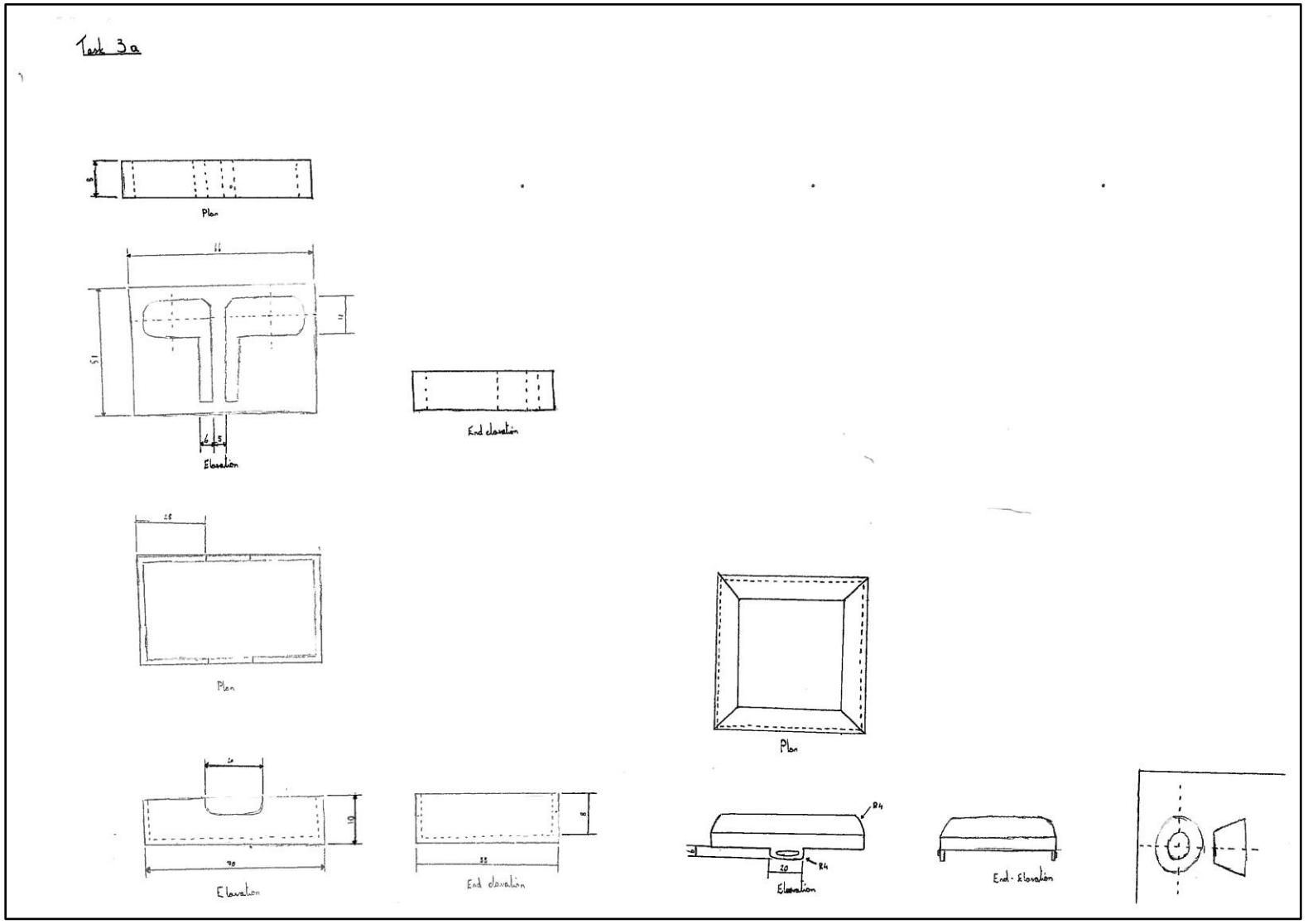
Task 3a
Plan
Elevation
End elevation
Plan
Plan
Elevation
End elevation
R4
R4
Elevation
End - Elevation

Task 3b

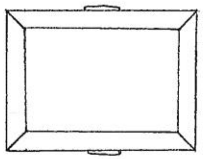

Plan

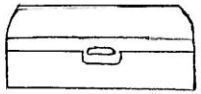

Elevation

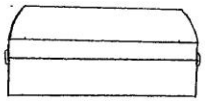

End Elevation

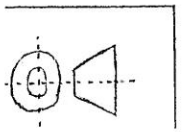
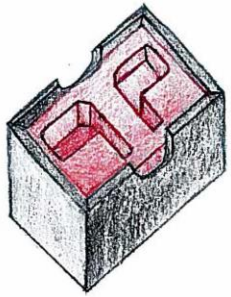
Task 3C