Candidate 1 evidence

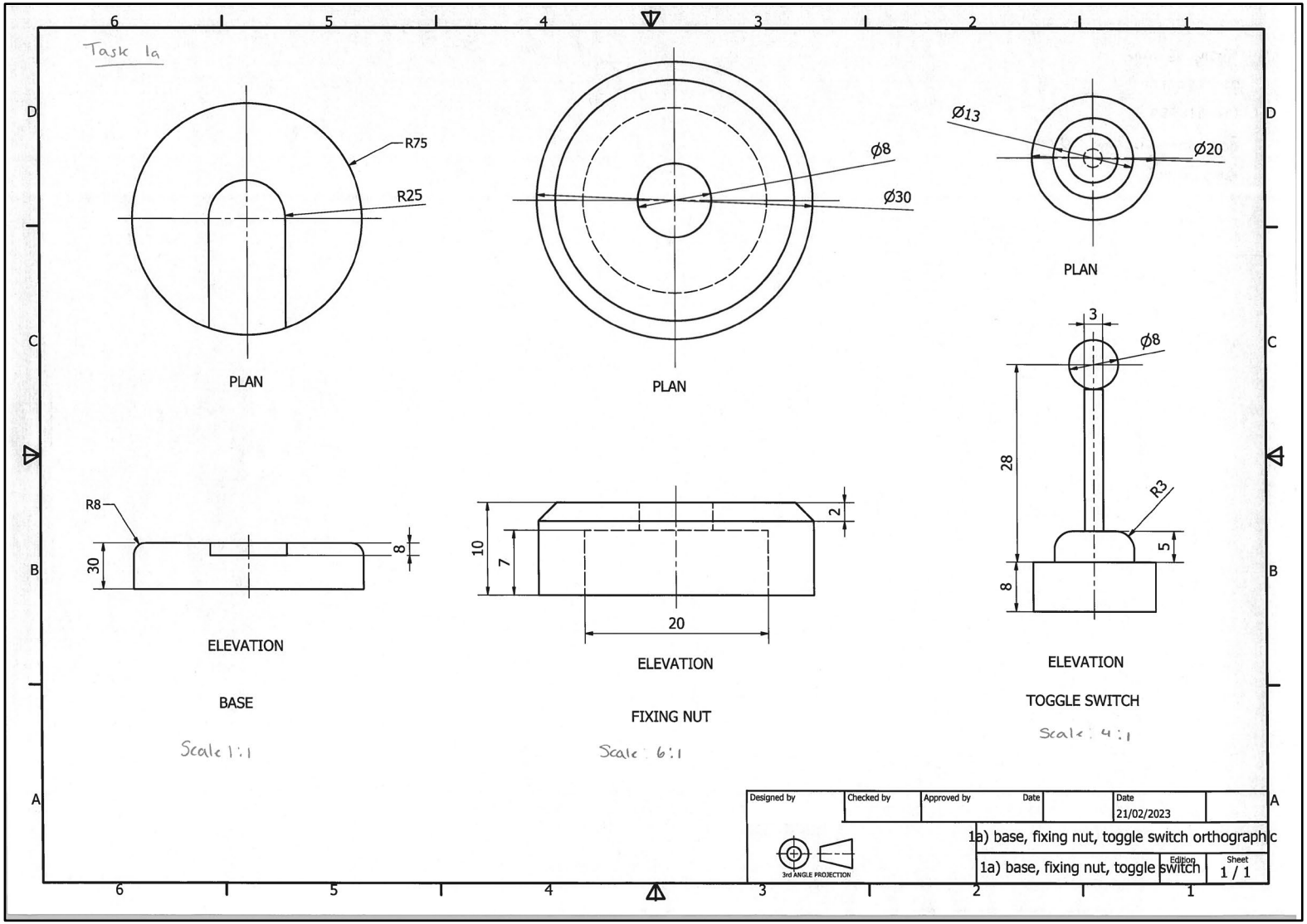

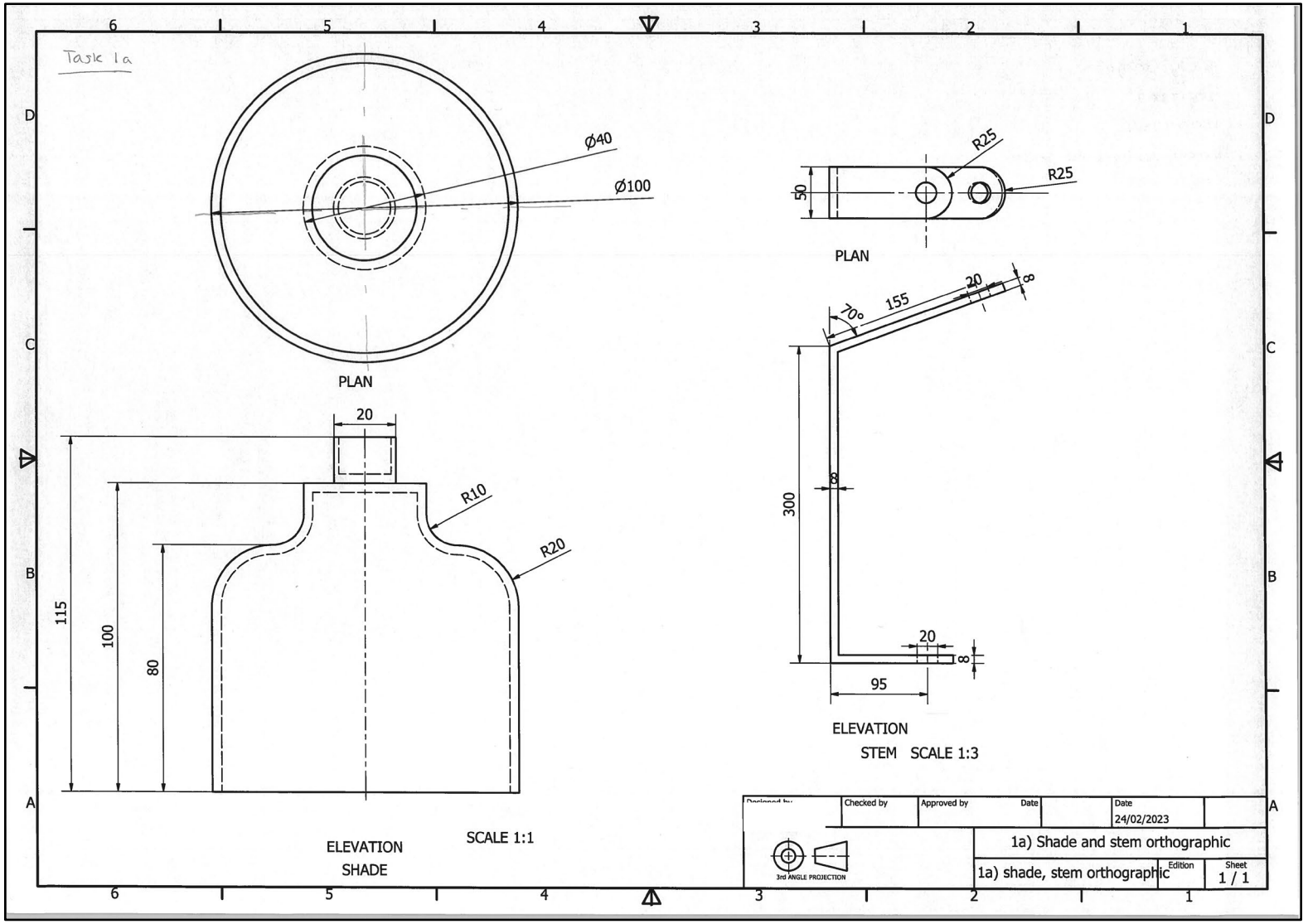
Task 1a
Ø40
Ø100
PLAN
20
R10
R20
115
100
80
ELEVATION
SHADE
SCALE 1:1
R25
R25
50
PLAN
20
8
155
70°
300
8
20
8
95
ELEVATION
STEM SCALE 1:3
Checked by
Approved by
Date
Date
24/02/2023
1a) Shade and stem orthographic
3rd ANGLE PROJECTION
1a) shade, stem orthographic
Edition
Sheet
1 / 1

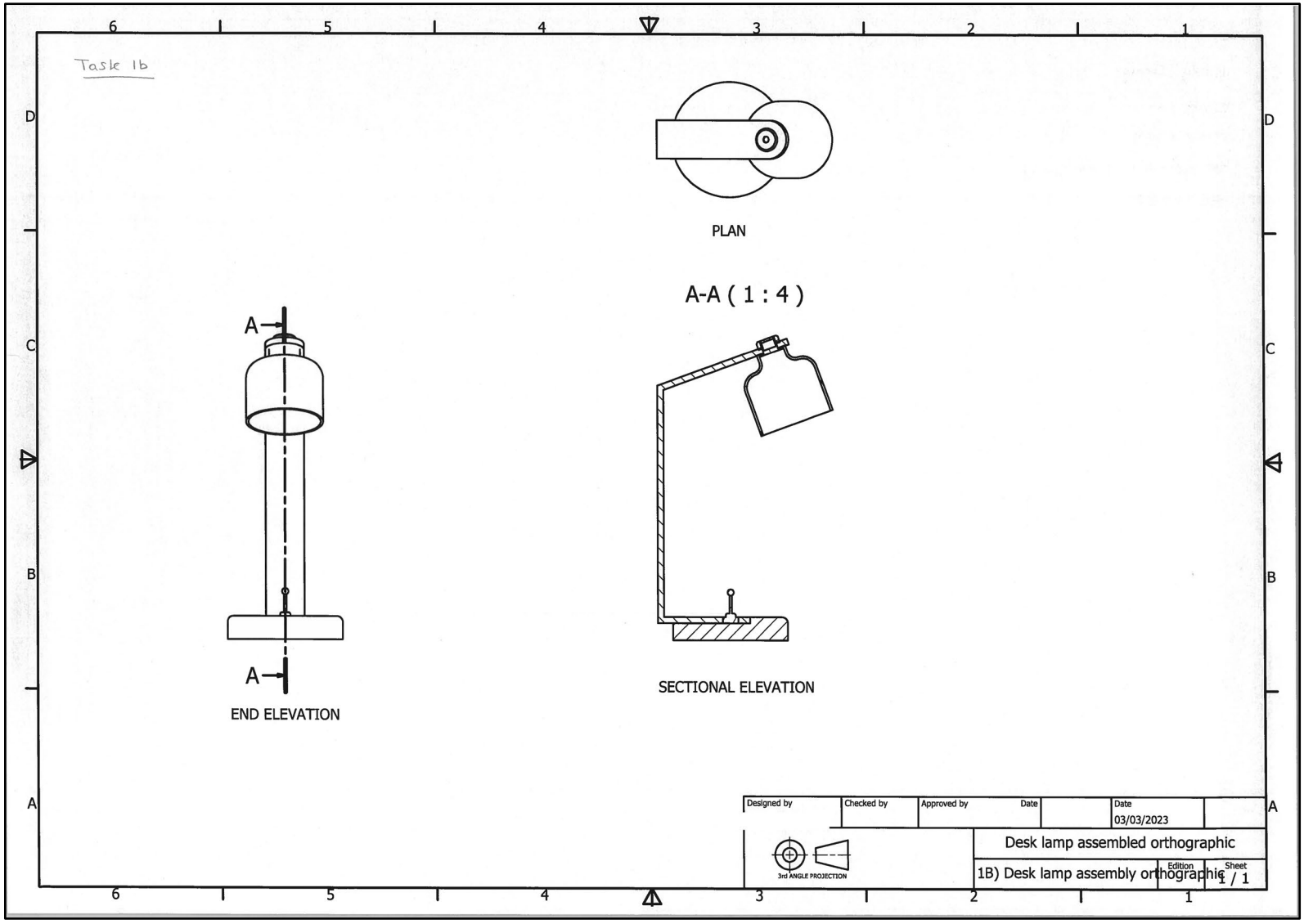
Task 1b
PLAN
A-A (1 : 4)
A
A
END ELEVATION
SECTIONAL ELEVATION
Designed by
Checked by
Approved by
Date
Date
03/03/2023
3rd ANGLE PROJECTION
Desk lamp assembled orthographic
1B) Desk lamp assembly orthographic
Edition
Sheet
1 / 1

Task 1c

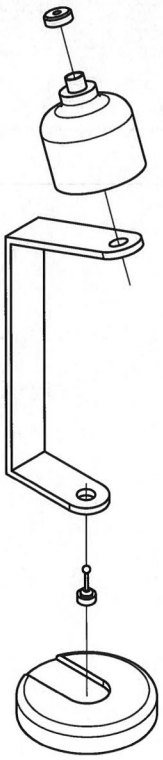

EXPLODED ISOMETRIC

Designed by	Checked by	Approved by	Date		Date	
					14/03/2023	

3rd ANGLE PROJECTION

Exploded isometric desk lamp

Desk lamp exploded isometric | Edition | Sheet 1 / 1

Task 2a

Task 2b

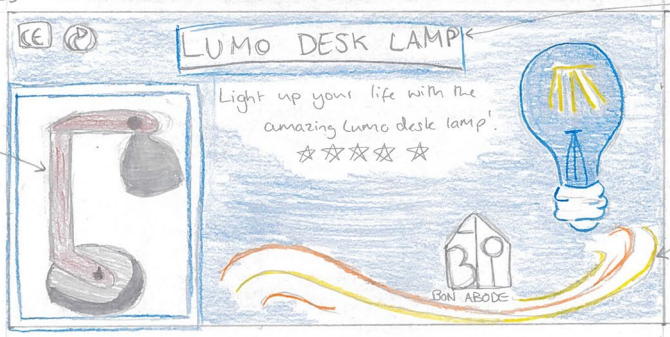

Depth is created by scaling up the size of the desk lamp to make it bigger and more noticeable, making it stand out from the rest of the poster

Dominance is created by using an underline, this emphasizes the name of the product making it clear what the product is.

line is used to lead your eye across the layout, making it flow more and make it easier on the eye

A radial Balance is used surrounding the lamp in the centre making it stand out that it's the main focal point, making it easy on the eye

White space is created by leaving a gap in the posters and not overfilling it. This makes it easier on the eye, and makes the main images/text stand out.

Depth is created by the layering of images, drawing the viewers eye straight to the lamp making it very eye-catching and stand out as the main product on the poster.

Task 3c

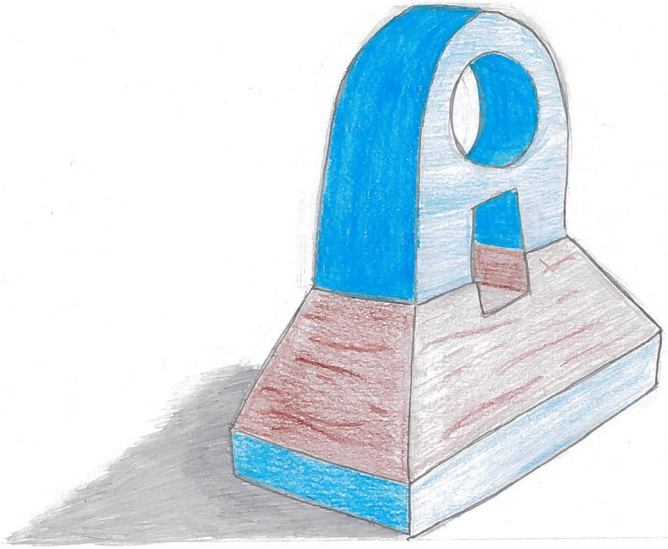

Task 2c

The use of contrast makes the poster very eye catching and makes it stand out. This is created by the use of light and dark colours, which therefore create a contrast making parts of the poster very prominent, leading to a great visual impact.

Unity is created by the use of a simplified colour pallet. The only colours used are yellow and blue this helps to help connect the poster together and make it look more aesthetically pleasing., drawing your eye to the lamp at the centre, making it stand out.

Packaging panel dimensions: 340mm x 170mm

Depth is created by the use of layering shapes. By having the desk lamp layered on top of the yellow oval and on top of the background it creates depth and helps to daw the eye to the lamp and make it the main focus of the poster.

Repetition is created as the shape of rectangles with a white outline is repeated. This gives the poster a visual impact and creates depth too. The repetition helps to connect the poster up and easily lead the eye through it.

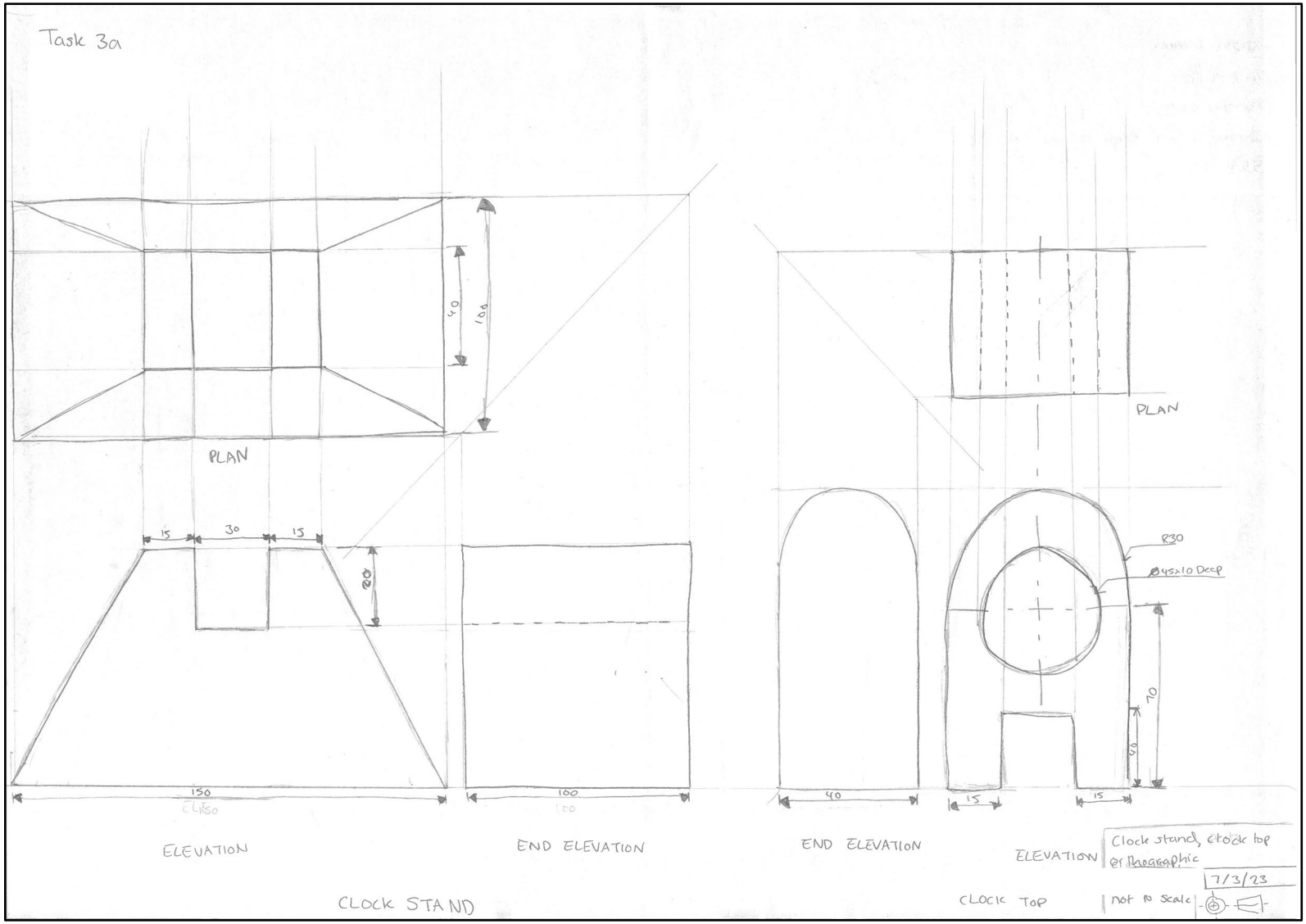
Task 3a
PLAN
40
100
15
30
15
20
150
100
ELEVATION
END ELEVATION
CLOCK STAND
PLAN
R30
Ø45x10 Deep
70
40
40
15
15
END ELEVATION
ELEVATION
CLOCK TOP
Clock stand, clock top
orthographic
7/3/23
not to scale

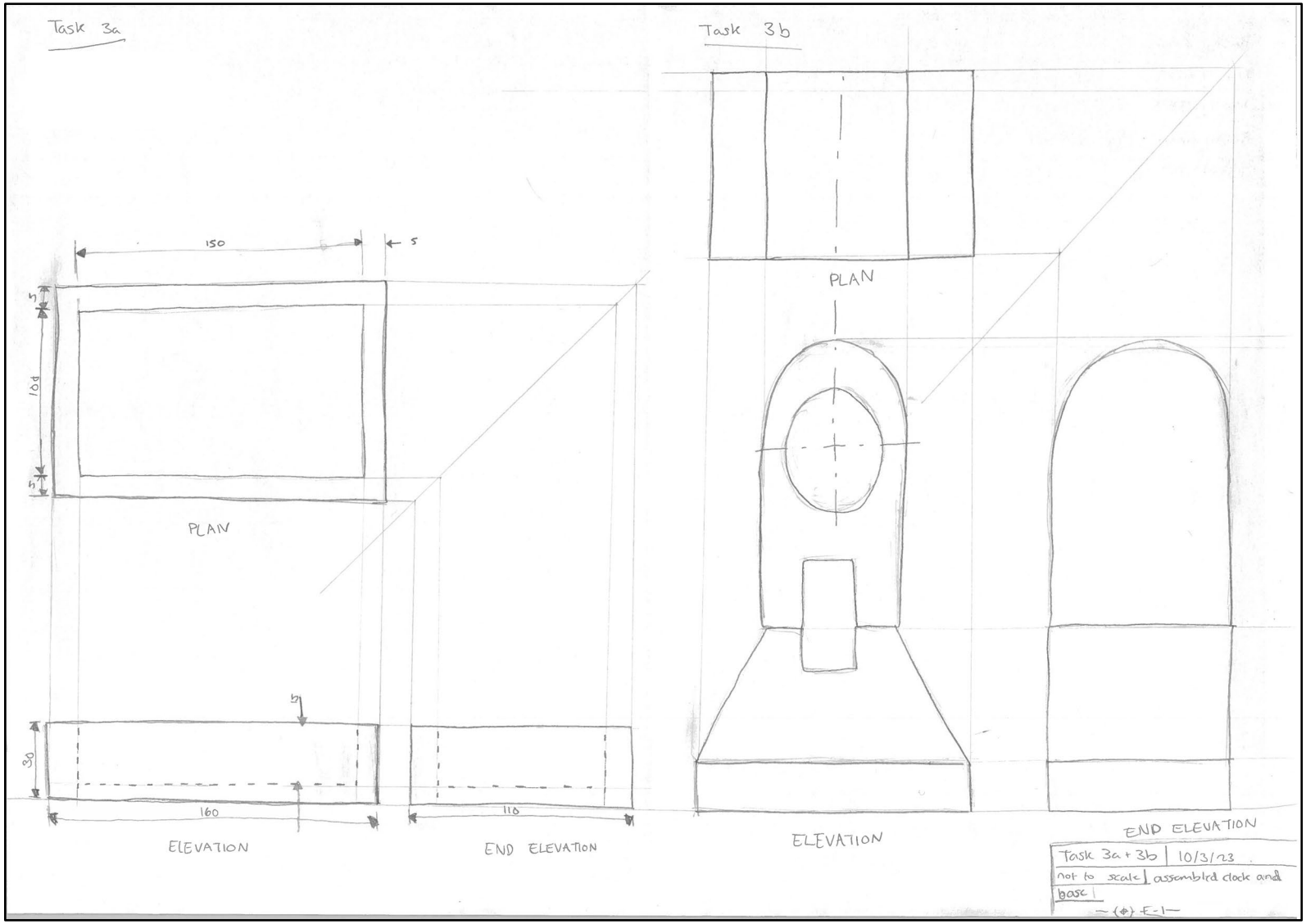
Task 3a
150
5
5
104
5
PLAN
5
30
160
110
ELEVATION
END ELEVATION
Task 3b
PLAN
ELEVATION
END ELEVATION
Task 3a + 3b | 10/3/23
not to scale | assembled clock and base |
E-1

Candidate 2 evidence

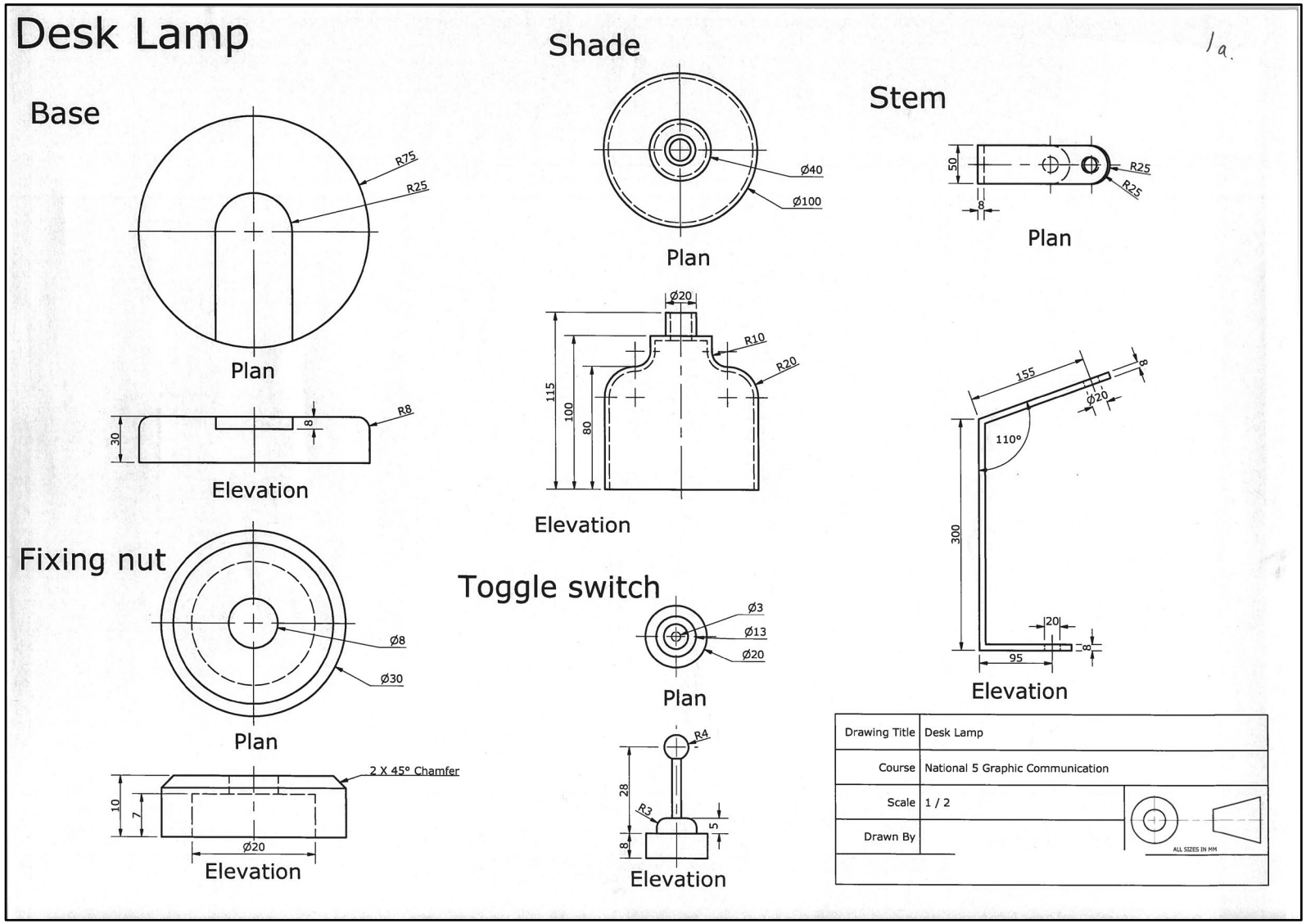

Assembled Desk Lamp

26,2c

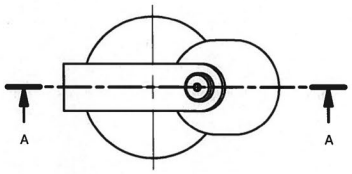

Plan

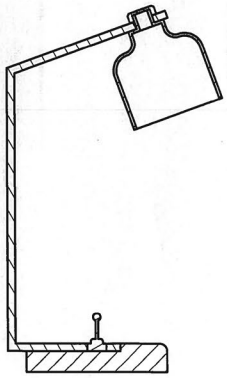

SECTION B-B

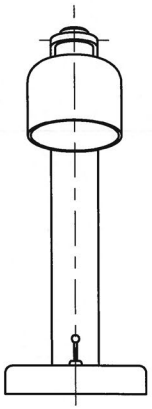

End Elevation

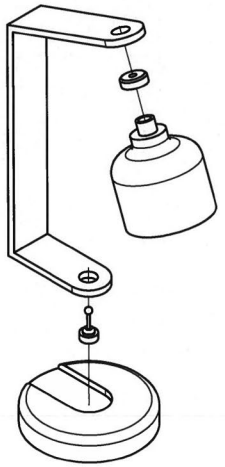

Exploded Isometric

Drawing Title	Desk Lamp
Course	National 5 Graphic Communication
Scale	1 / 4
Drawn By	

ALL SIZES IN MM

2b.

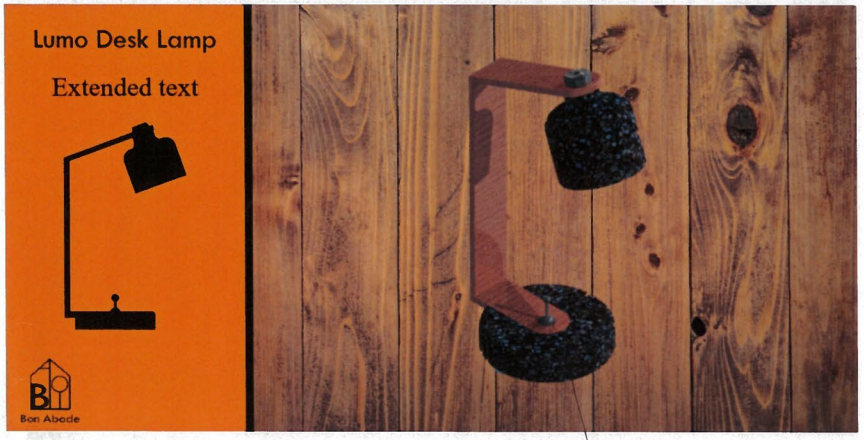

~~Large shadow of~~ Lamp on top of background creates depth

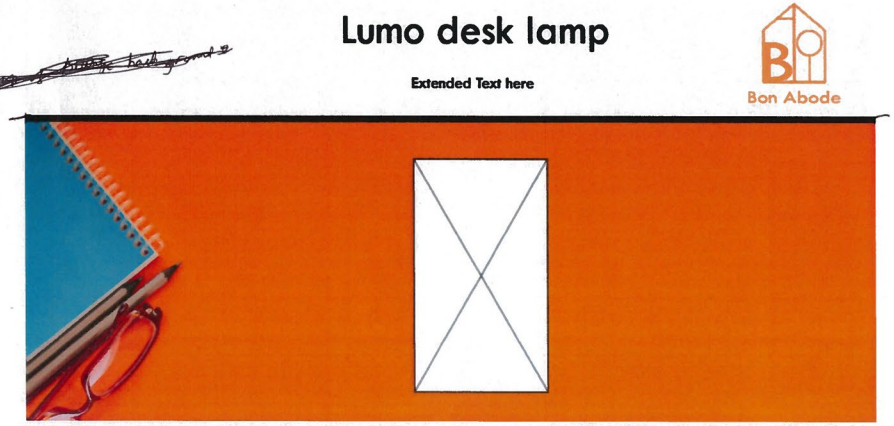

~~separating white~~ ~~Lint [illegible] on top of orange background~~ depth

on top of orange background and Black line separating white and ~~orange~~ orange background creates depth

2C.

Size and drop shadow of lamp creates dominance. This grabs the readers attention onto the lamp

centre alignment with Logo and black lamp creates structure and makes the page look neater

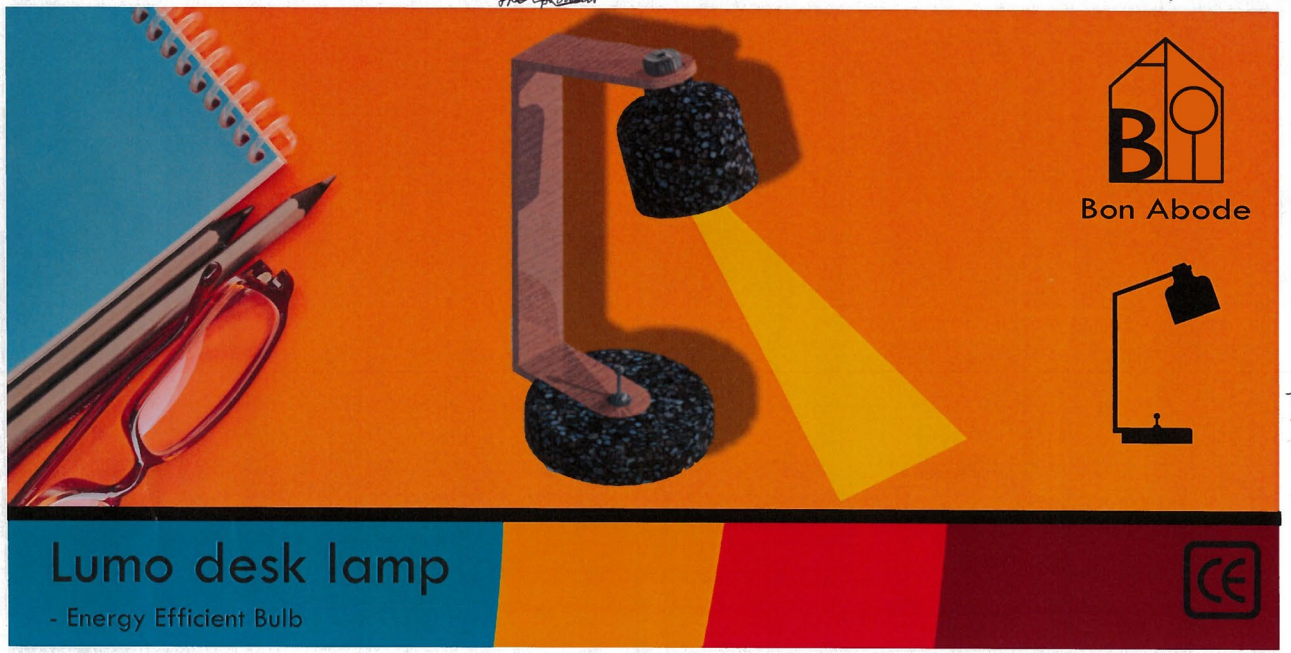

Black as logo, lamp and line creates contrast. Makes it stand out. The line divides the main section (lamp) with Title and additional text at the bottom of the page.

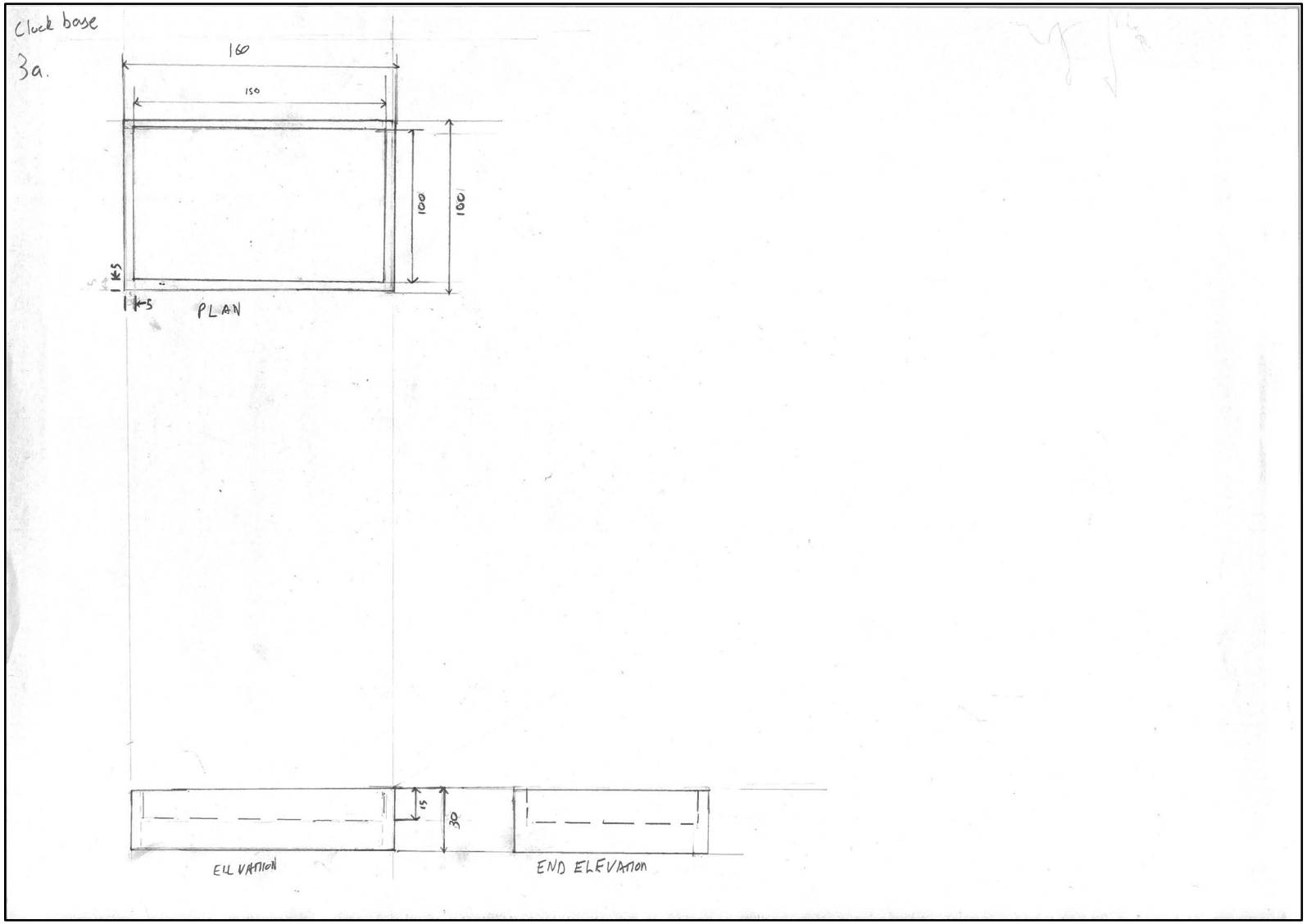
Clock base
3a.
160
150
100
100
15
15
PLAN
15
30
ELEVATION
END ELEVATION

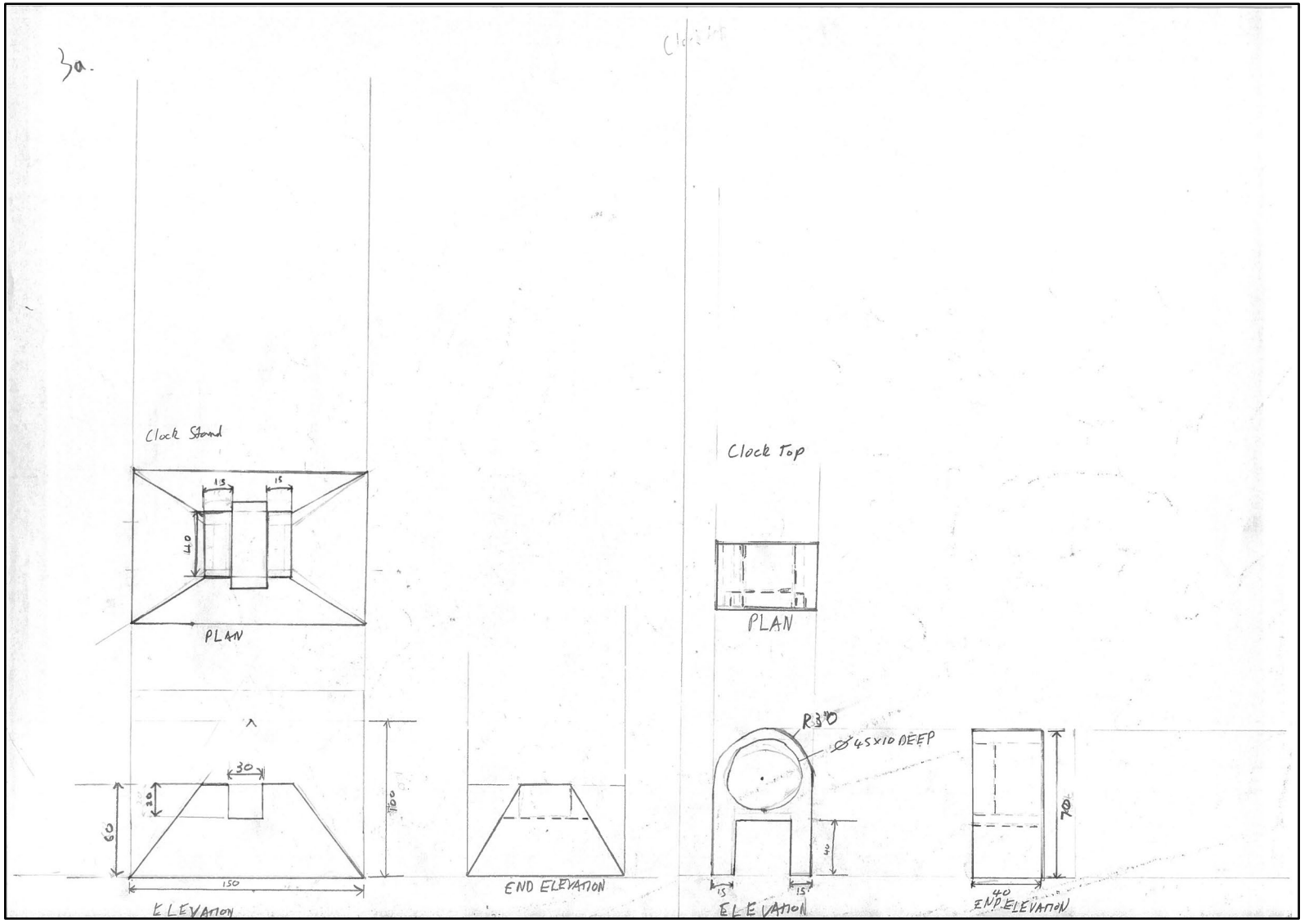
3a.
Clock Stand
15
15
40
PLAN
30
20
60
150
150
ELEVATION
END ELEVATION
Clock Top
PLAN
R30
Ø45x10 DEEP
15
15
40
ELEVATION
70
40
END ELEVATION

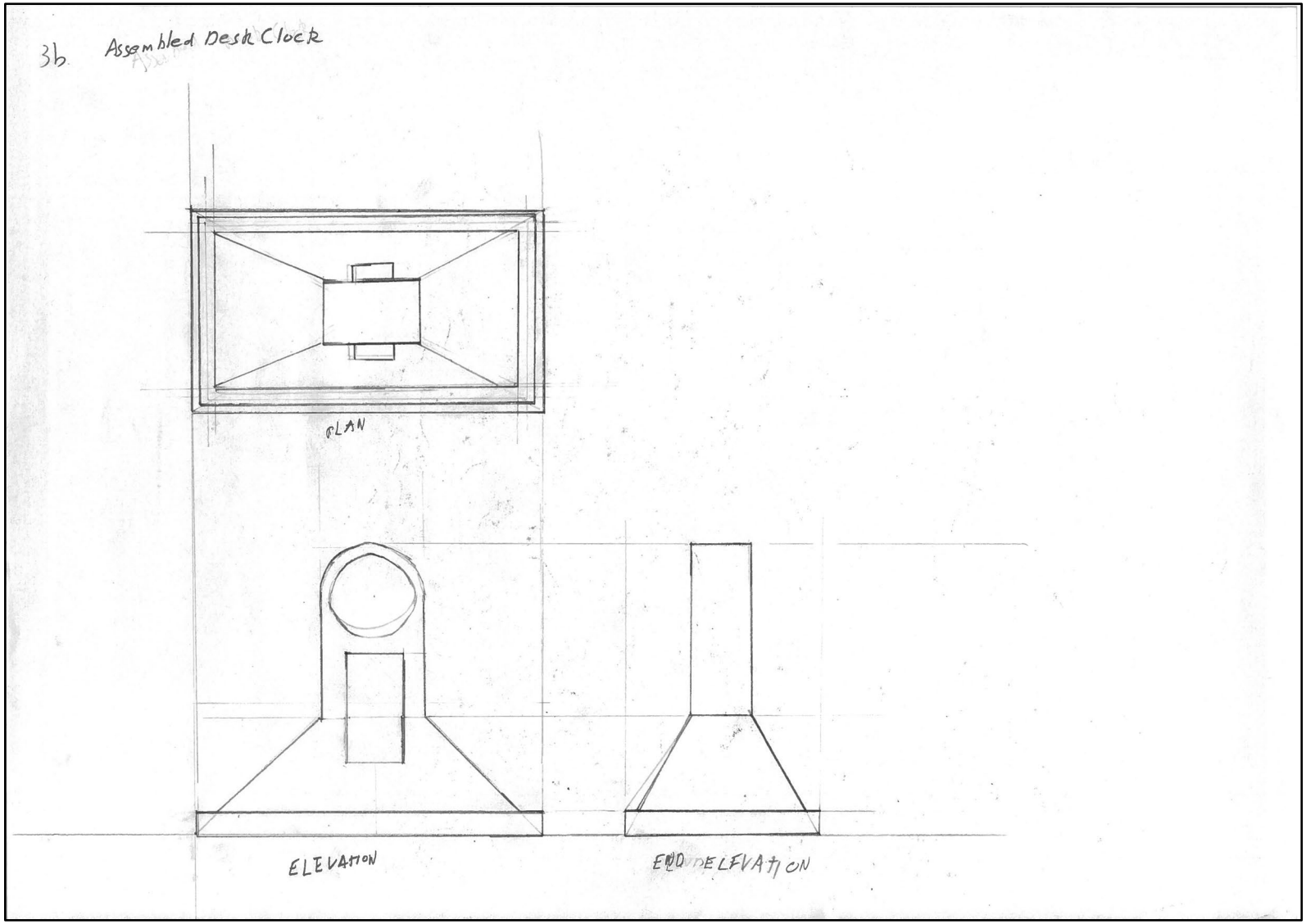
3b Assembled Desk Clock
PLAN
ELEVATION
END ELEVATION

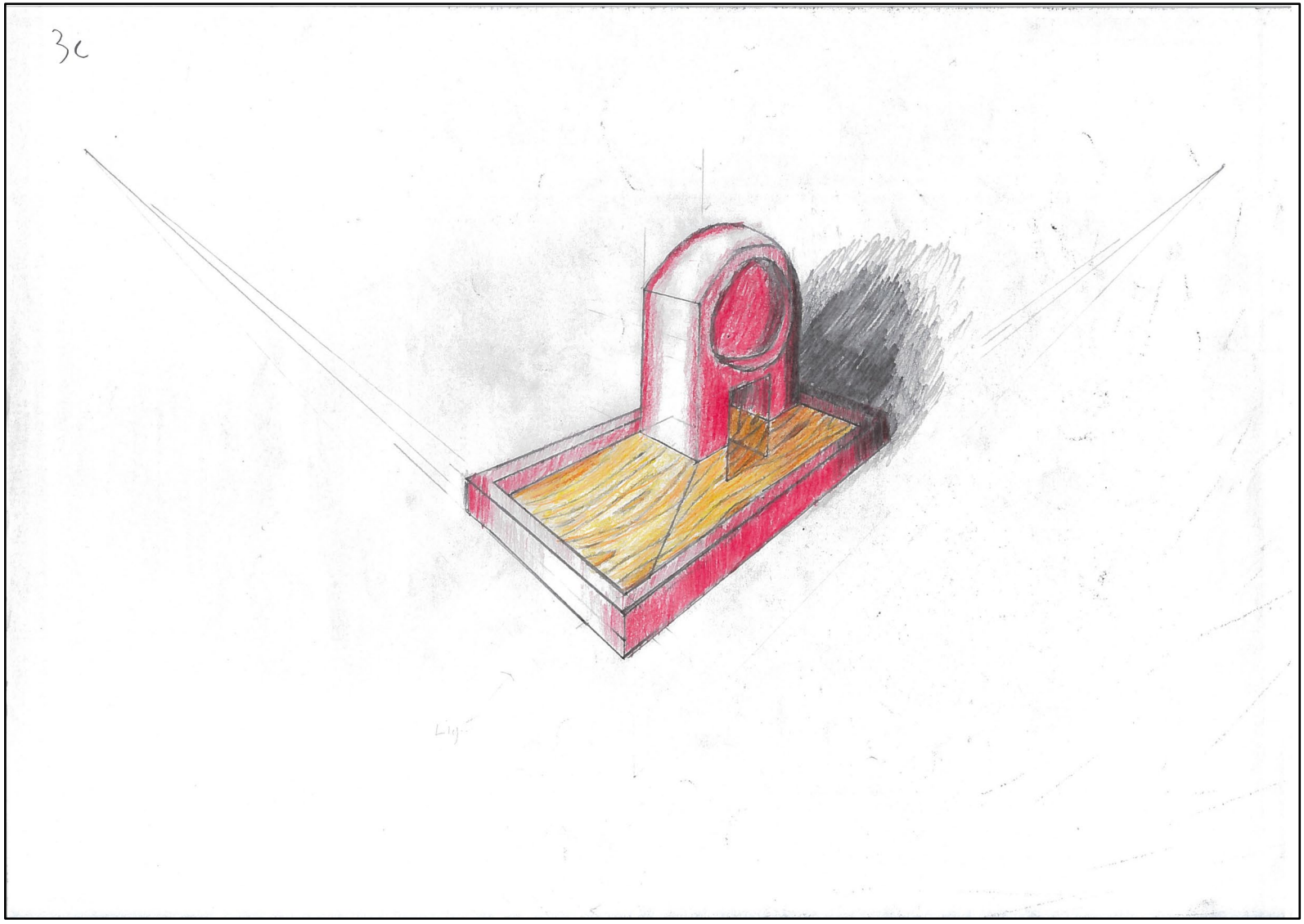
3c

Candidate 3 evidence

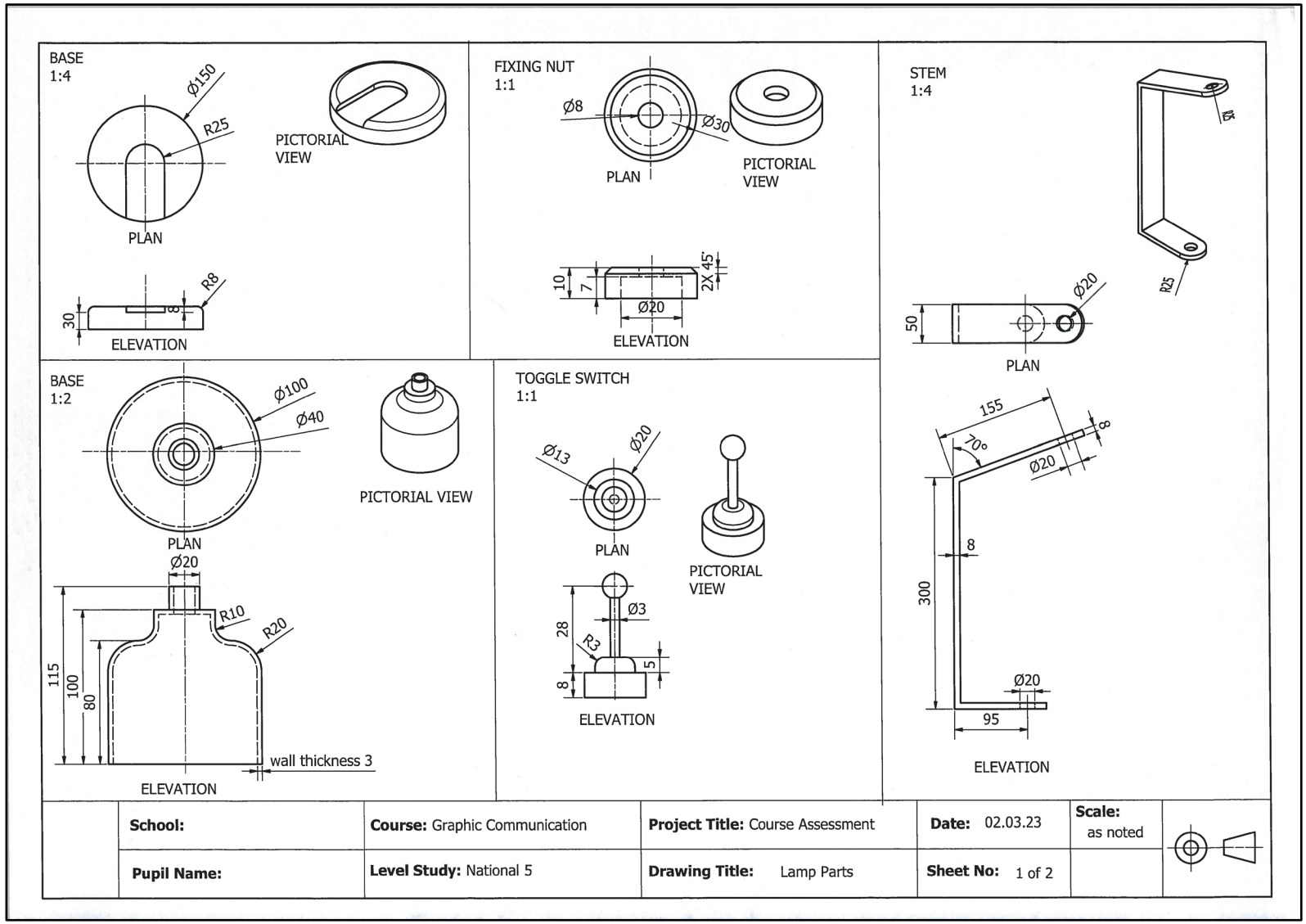

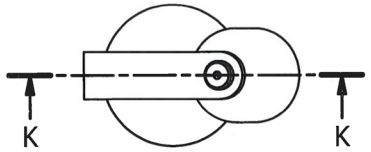

PLAN

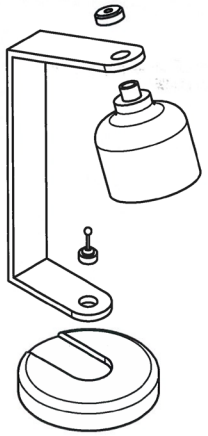

EXPLODED PICTORIAL VIEW

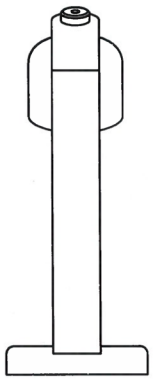

END ELEVATION

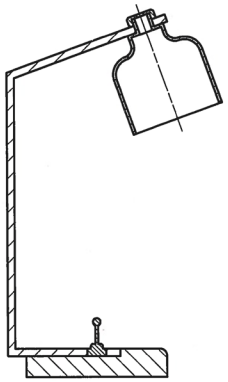

SECTIONAL ELEVATION

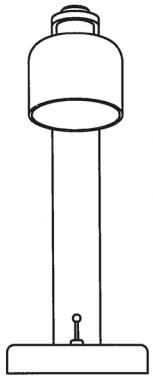

END ELEVATION

School:	**Course:** Graphic Communication	**Project Title:** Course Assessment	**Date:** 02.03.23	**Scale:** 1:4	
Pupil Name:	**Level Study:** National 5	**Drawing Title:** Assembled Lamp & Exploded View	**Sheet No:** 1 of 2		

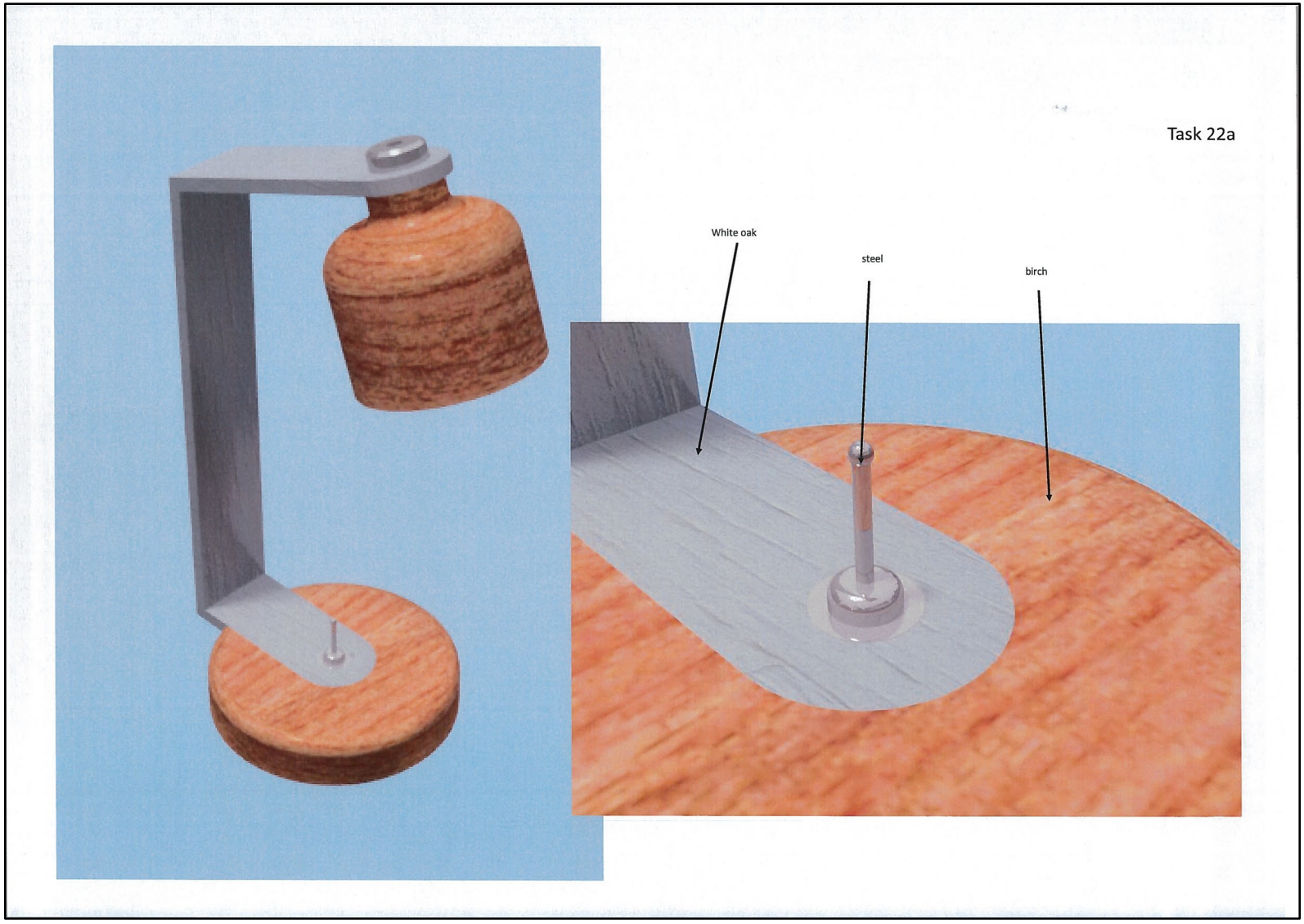
Task 22a
White oak
steel
birch

Task 2b

Depth where lamp overlaps grey shapes.

Depth where lamp overlaps colour background curves.

Task 2c

Depth with lamp overlaps grey shapes. **Alignment** of text to the right and logos horizontally. **Dominant** large lamp image. **Contrast** of big outline text and smaller reverse text. **White space** left for eye to rest. **Texture** of wood image to reflect wooden lamp.

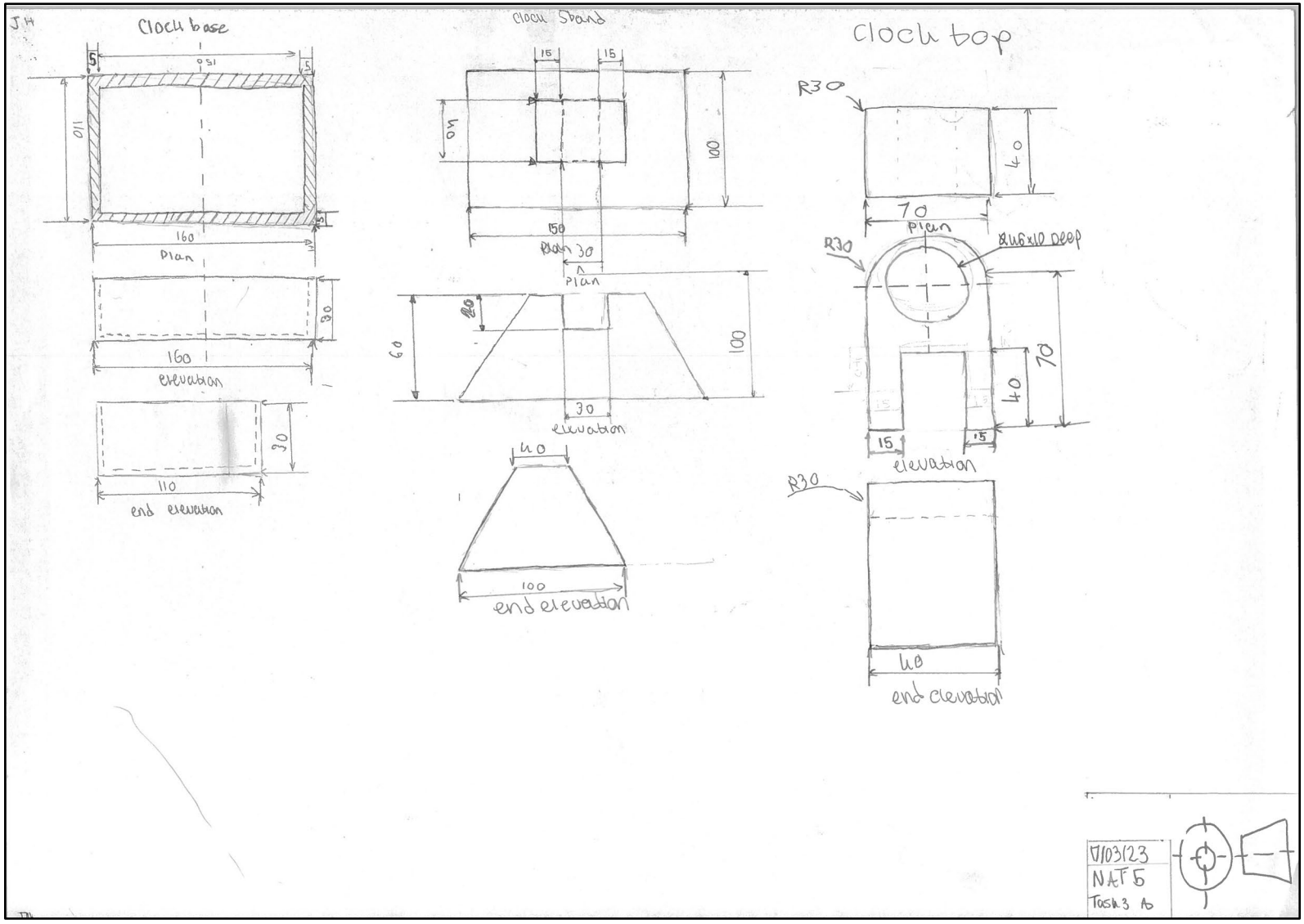
JH
Clock base
5
95
5
110
5
160
Plan
30
160
elevation
30
110
end elevation
Clock Stand
15
15
50
100
150
Plan 30
Plan
20
60
100
30
elevation
40
100
end elevation
clock top
R30
40
70
Plan
R30
8x6x10 Deep
70
40
15
15
elevation
R30
40
end elevation
7/03/23
NAT 5
Task 3 A

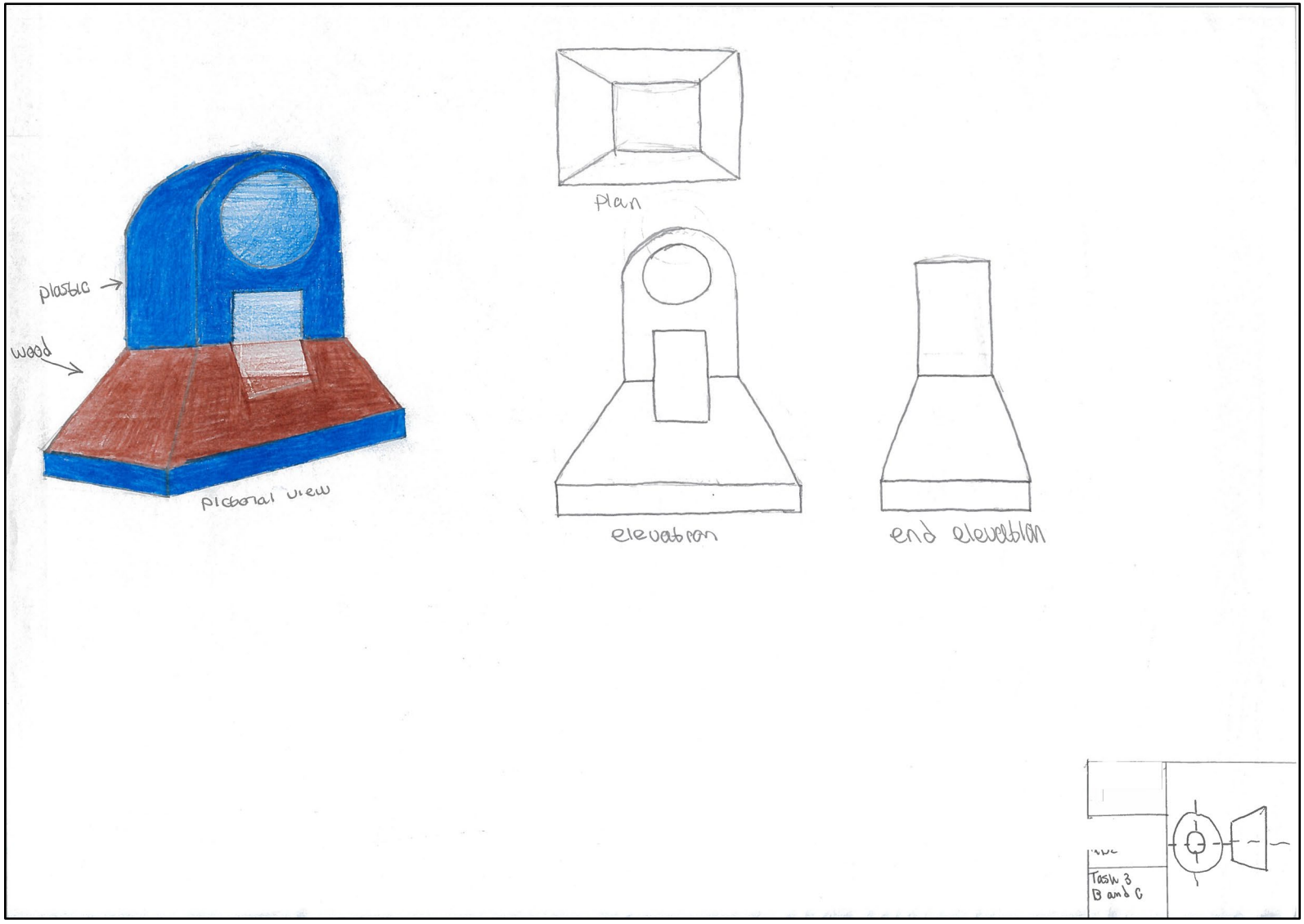
plastic
wood
pictorial view
plan
elevation
end elevation

Candidate 4 evidence

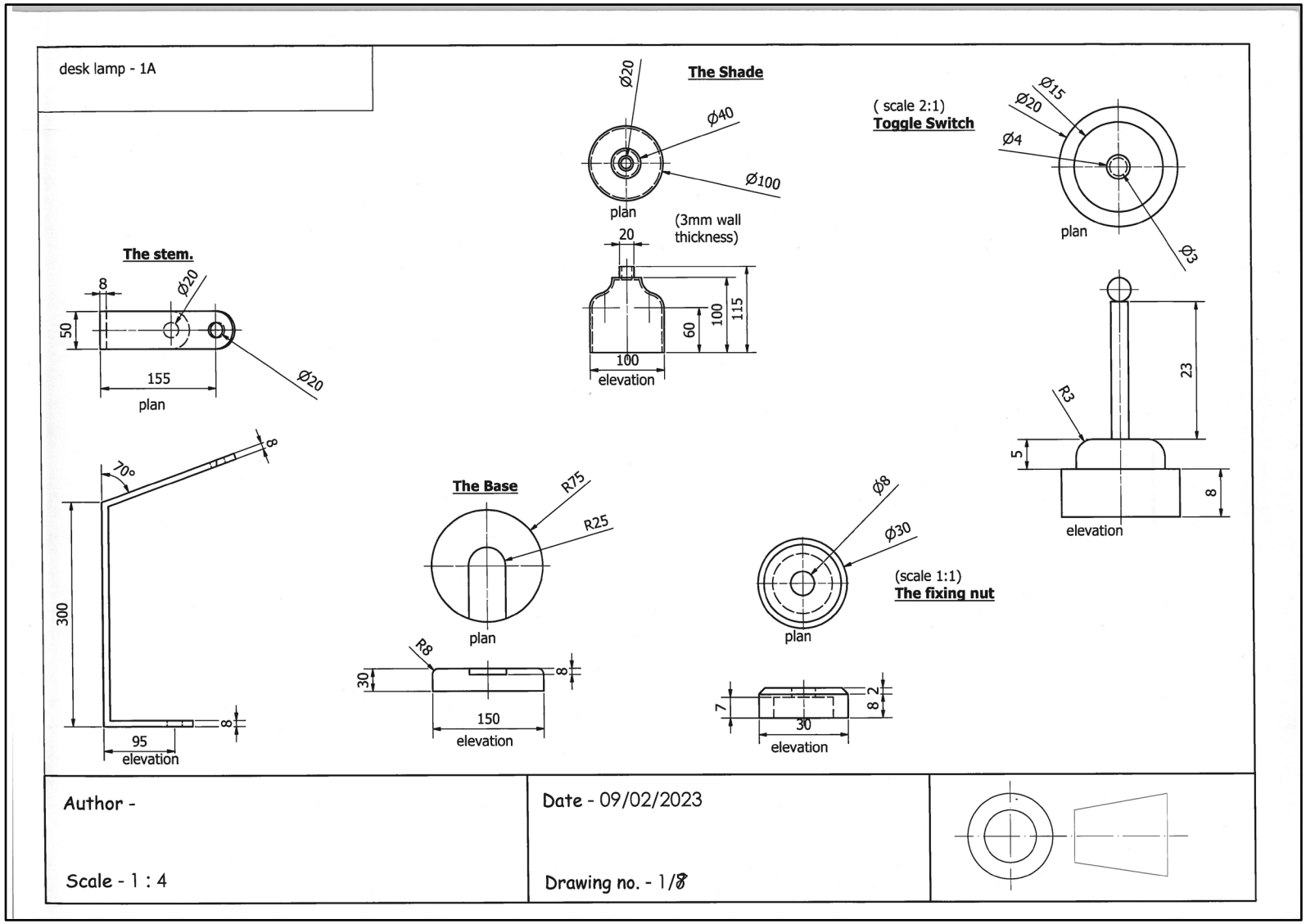

1B and 1C

assembled desk lamp

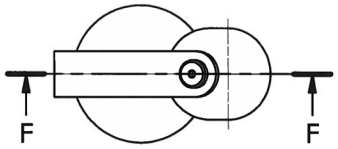

plan

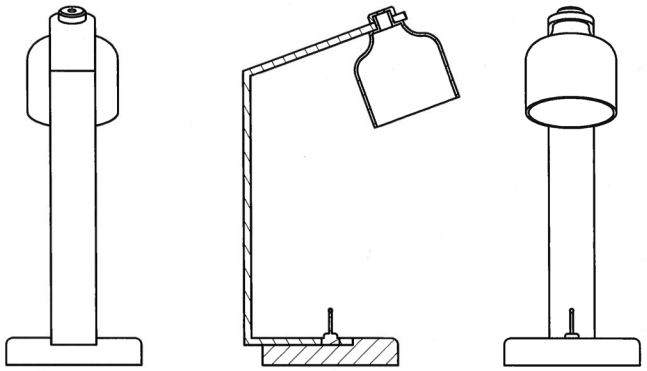

sectional end elevation

elevation

sectional end elevation

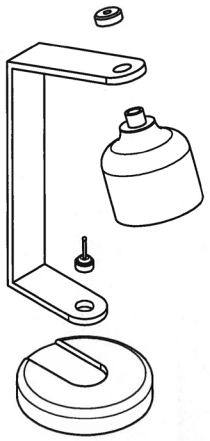

exploded isometric view

Author -	Date- 15/02/2023	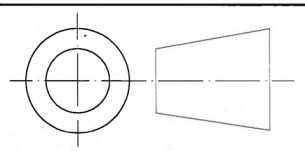
Scale - 1 : 4	Drawing no. - 2/8	

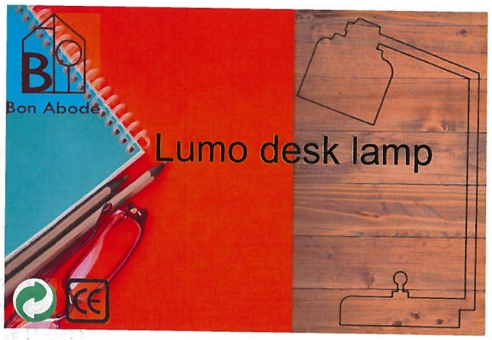

Depth is created by the layering of the lamp and the wood pattern

Bleed is created as the wood pattern has gone off the page

Alliance is created as the company logo is aligned with The safety warning on the left of the thumbnail.

Depth it created with the logo being layered on top of the Lamp.

Dominance is used by the lamp being black of a wood Background, this makes it stand out.

A plain layout had been created as there isn't much Extra information and lots of blank space.

A asymetrical layout has been used here as it creates a more stylised look compaired to if it was a symetrical layout. The aysemtrical layout also allows for to see the importance for the lamp.

Blank space is created here as there into a lot of need for extra information and it gives it a more clean layout.

Deapth is created here as the lamp siloette is layered over the wood pattern. This adds visual impact and creates domanace to the the lamp siloette.

A drop shadow Is used at the brand name because it makes it look like it has been illuminated by the lamp. And the yellow colour of the brand name make is seem like the lamp has shined down on the brand

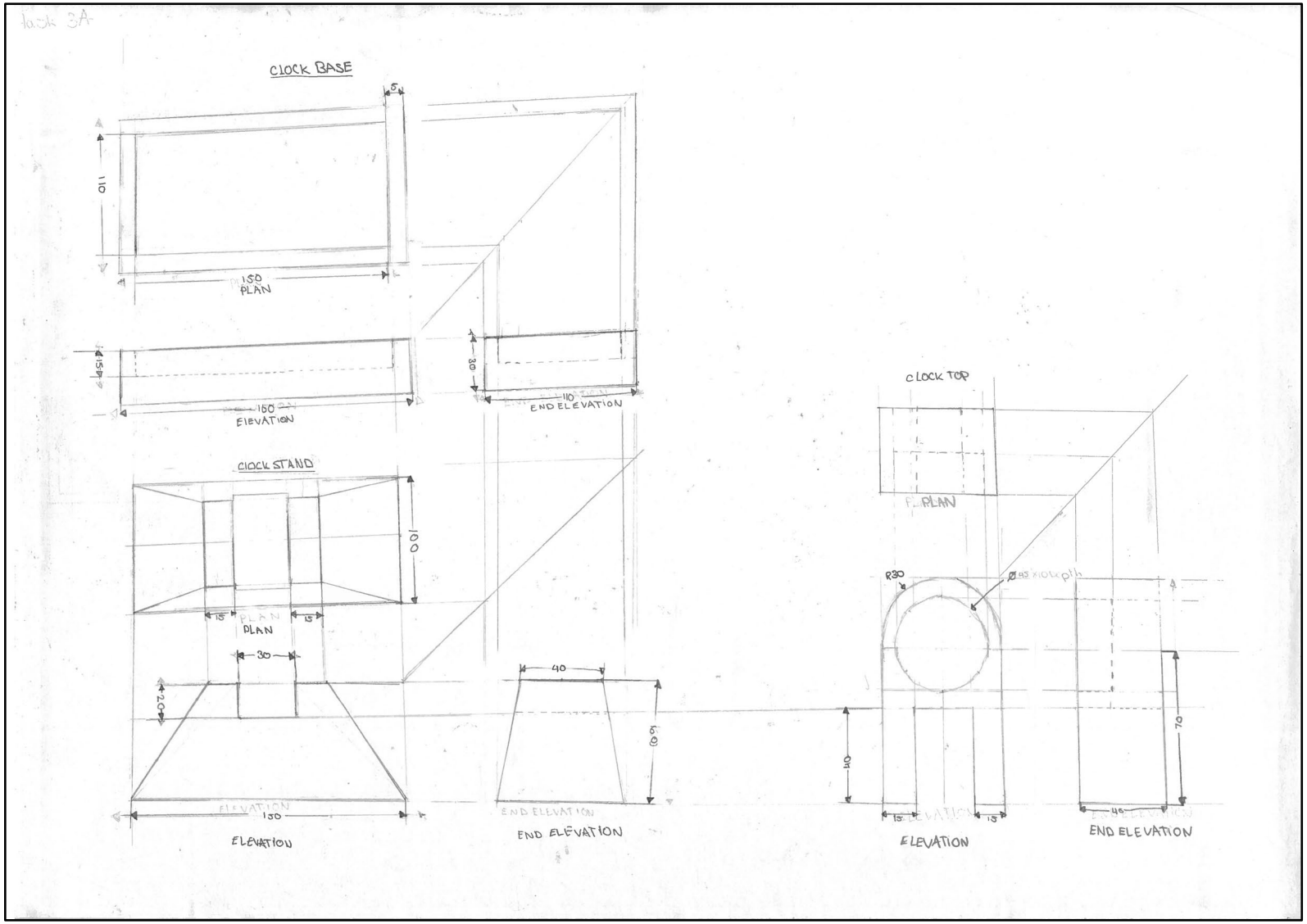
Task 3A
CLOCK BASE
5
110
150
PLAN
150
ELEVATION
30
110
END ELEVATION
CLOCK STAND
100
15
PLAN
15
30
20
150
ELEVATION
40
60
END ELEVATION
CLOCK TOP
PLAN
R30
Ø95 x10 deep
40
15
15
ELEVATION
70
45
END ELEVATION

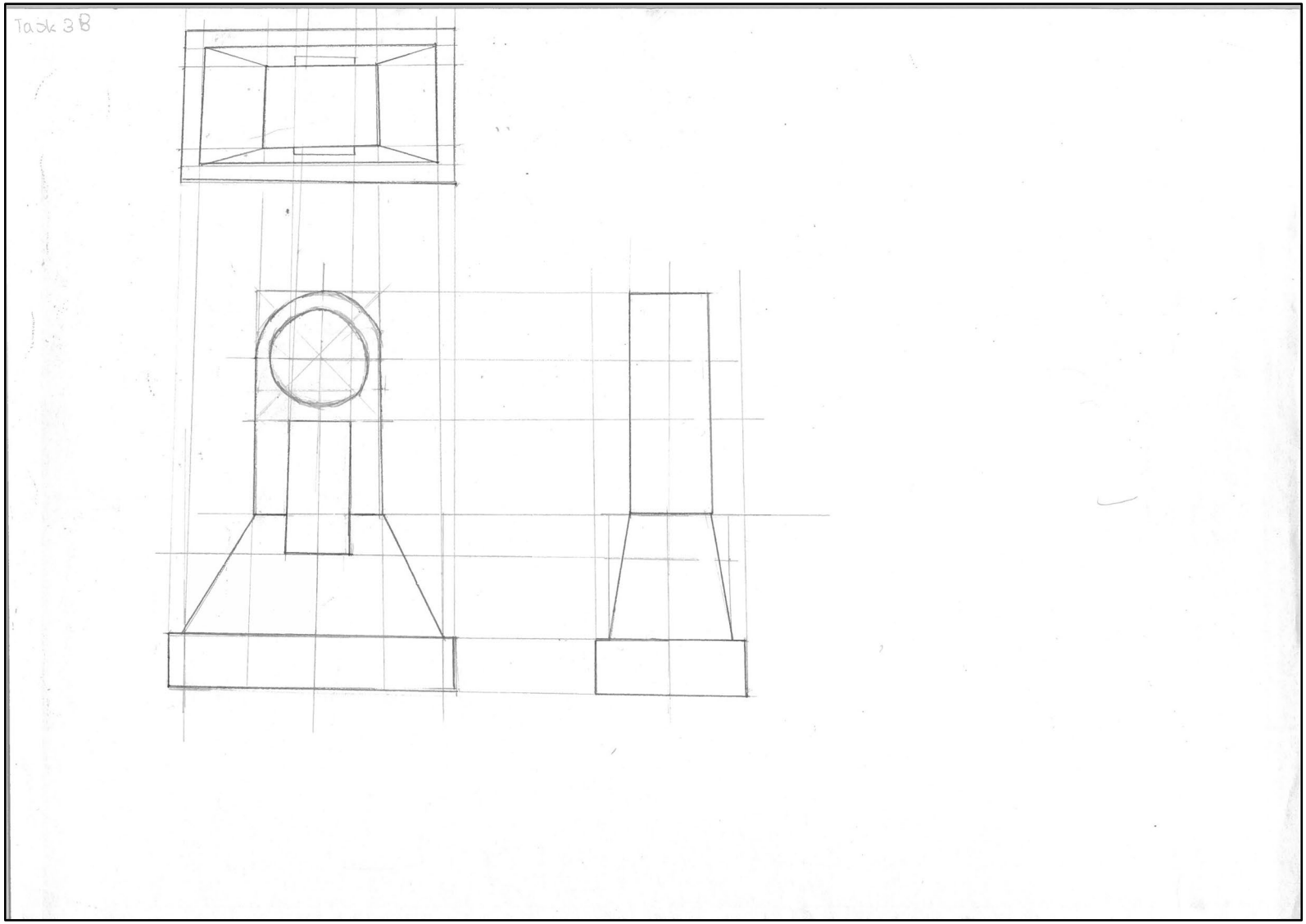
Task 3B

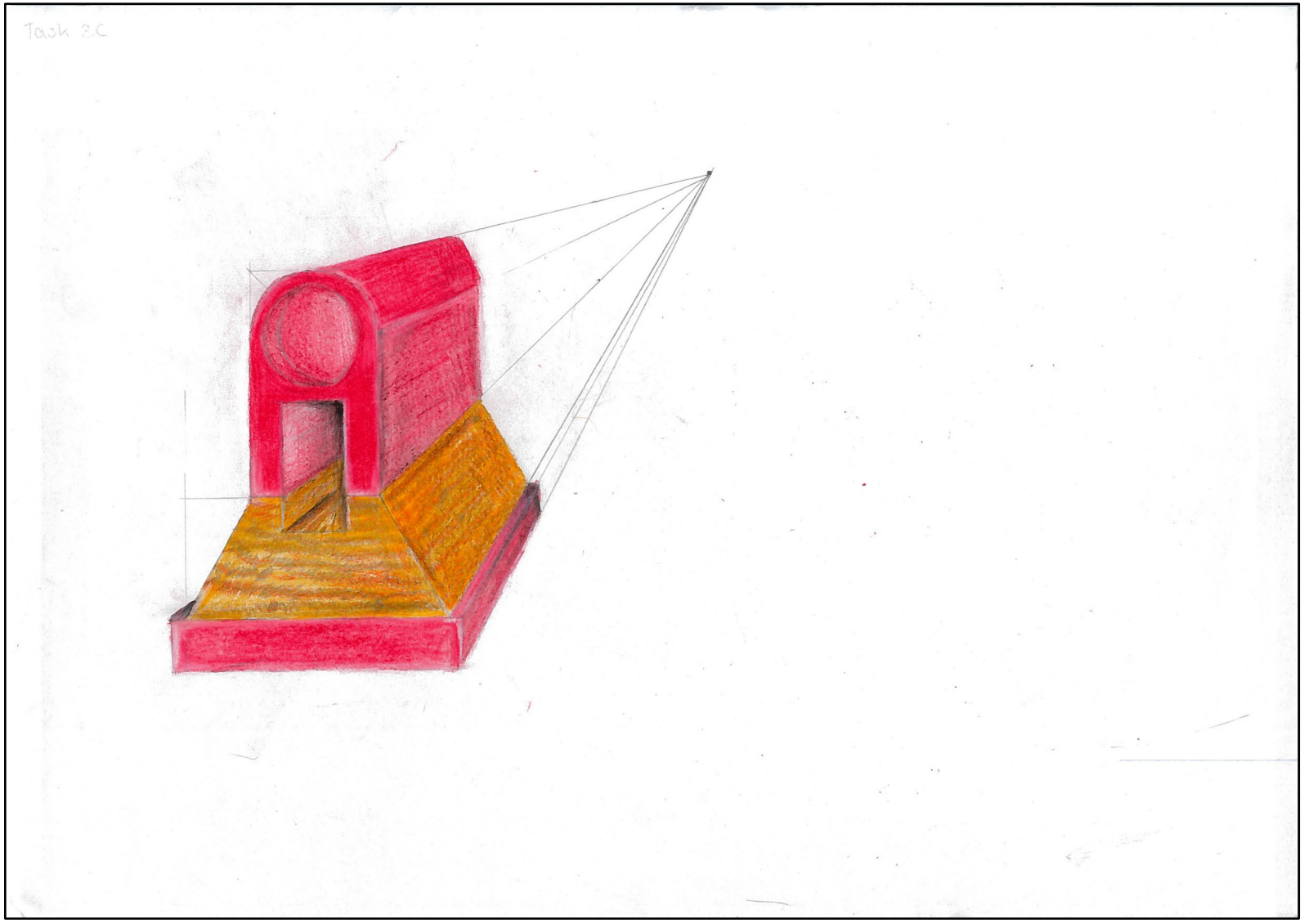
Task 3C

Candidate 5 evidence

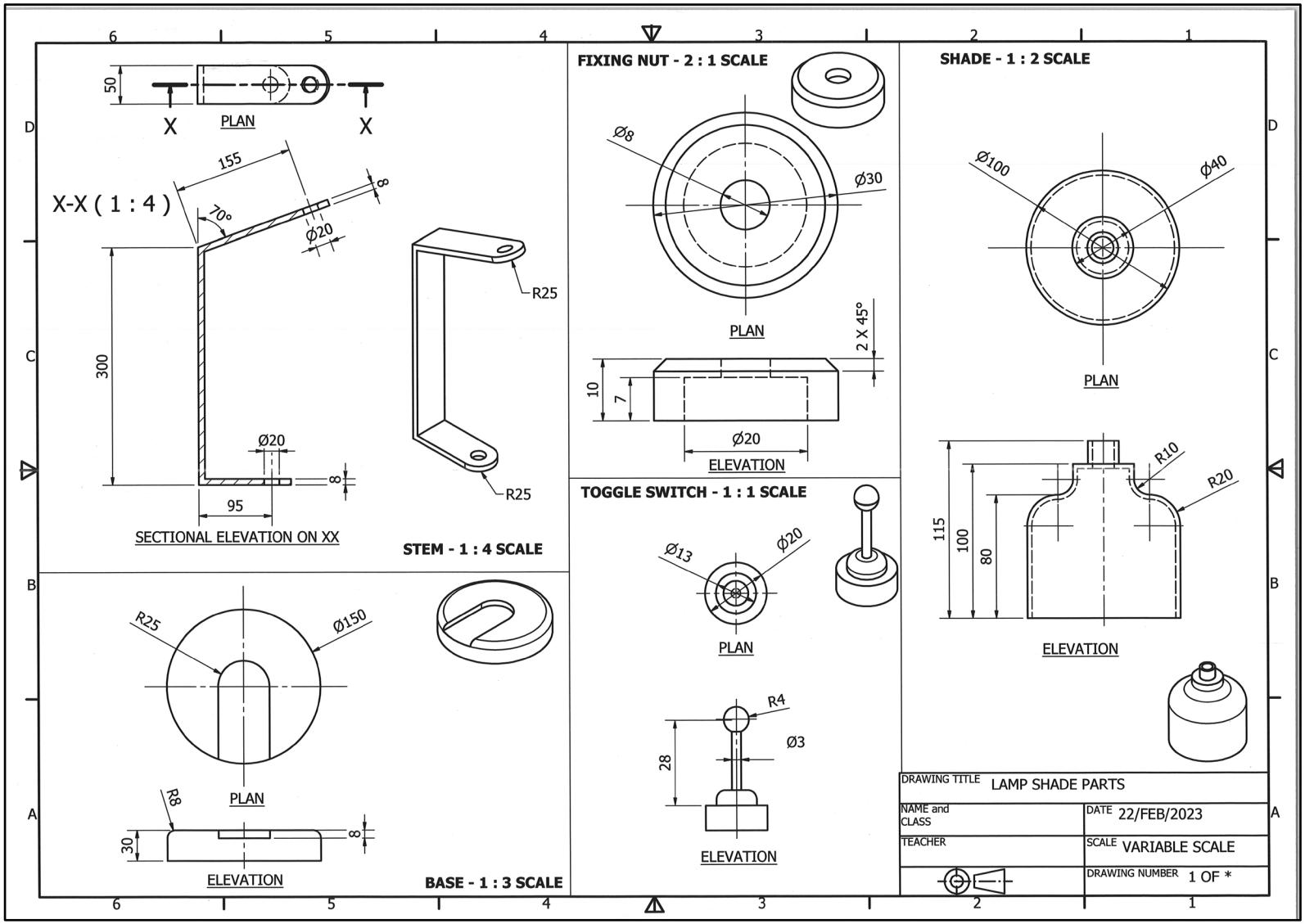

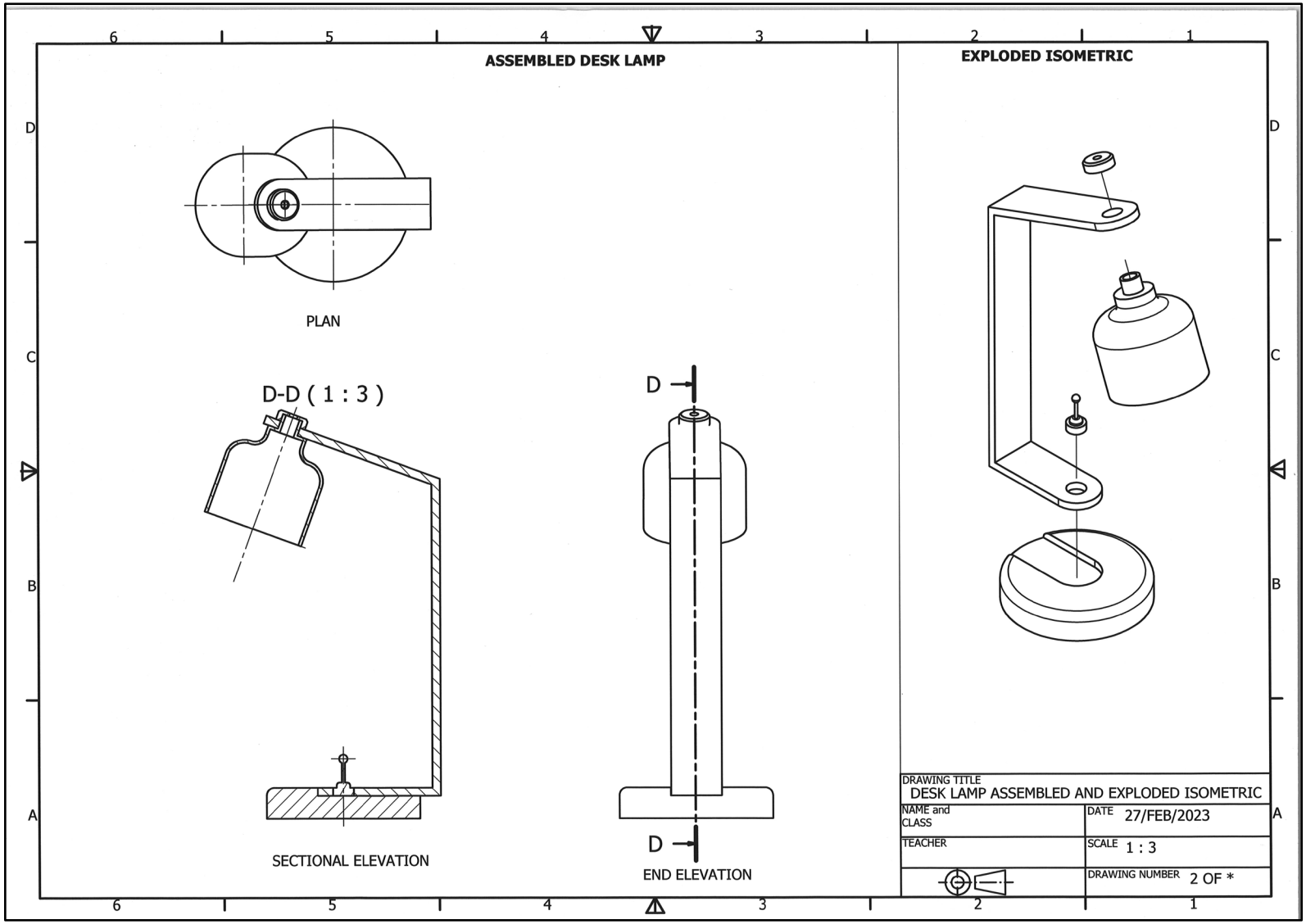
ASSEMBLED DESK LAMP
EXPLODED ISOMETRIC
PLAN
D-D (1 : 3)
SECTIONAL ELEVATION
D
D
END ELEVATION
DRAWING TITLE
DESK LAMP ASSEMBLED AND EXPLODED ISOMETRIC
NAME and CLASS
DATE 27/FEB/2023
TEACHER
SCALE 1 : 3
DRAWING NUMBER 2 OF *

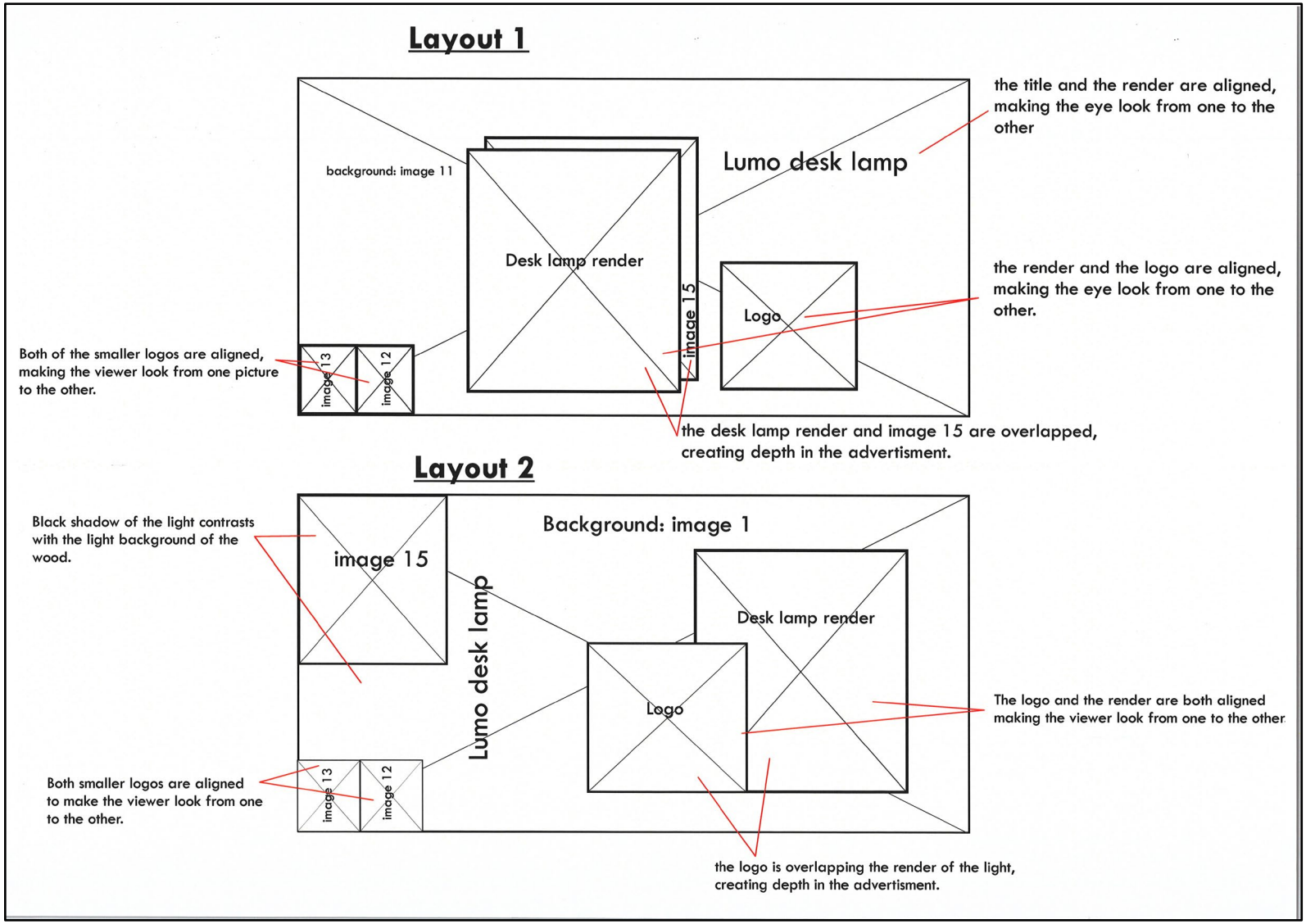
Layout 1
background: image 11
Lumo desk lamp
Desk lamp render
image 15
Logo
image 13
image 12
the title and the render are aligned, making the eye look from one to the other
the render and the logo are aligned, making the eye look from one to the other.
Both of the smaller logos are aligned, making the viewer look from one picture to the other.
the desk lamp render and image 15 are overlapped, creating depth in the advertisment.
Layout 2
Black shadow of the light contrasts with the light background of the wood.
Background: image 1
image 15
Lumo desk lamp
Desk lamp render
Logo
The logo and the render are both aligned making the viewer look from one to the other
Both smaller logos are aligned to make the viewer look from one to the other.
image 13
image 12
the logo is overlapping the render of the light, creating depth in the advertisment.

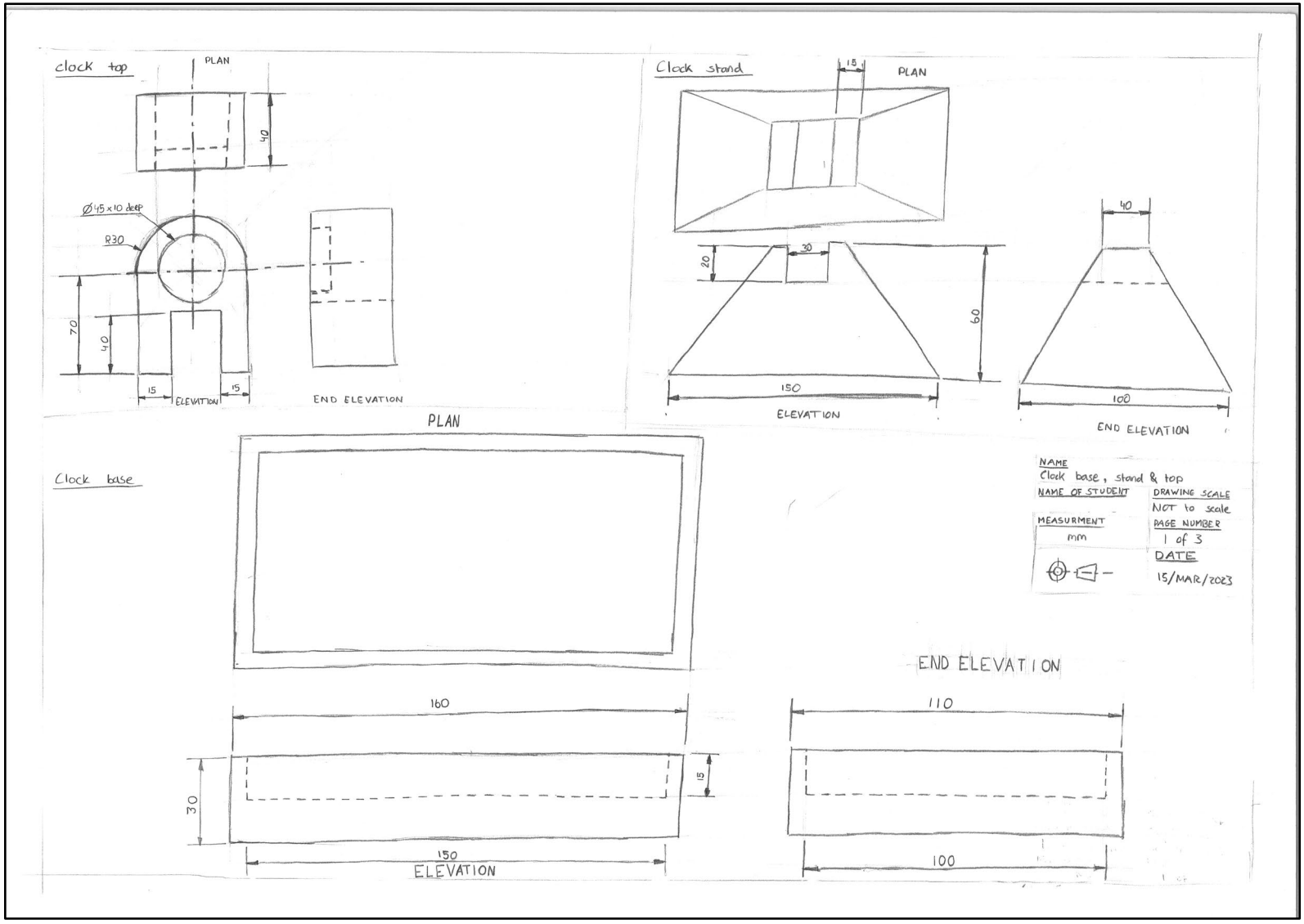
clock top
PLAN
40
Ø45 x 10 deep
R30
70
40
15
15
ELEVATION
END ELEVATION
Clock stand
15
PLAN
20
30
60
150
ELEVATION
40
100
END ELEVATION
Clock base
PLAN
160
30
15
150
ELEVATION
END ELEVATION
110
100
NAME
Clock base, stand & top
NAME OF STUDENT
DRAWING SCALE
NOT to scale
MEASURMENT
mm
PAGE NUMBER
1 of 3
DATE
15/MAR/2023

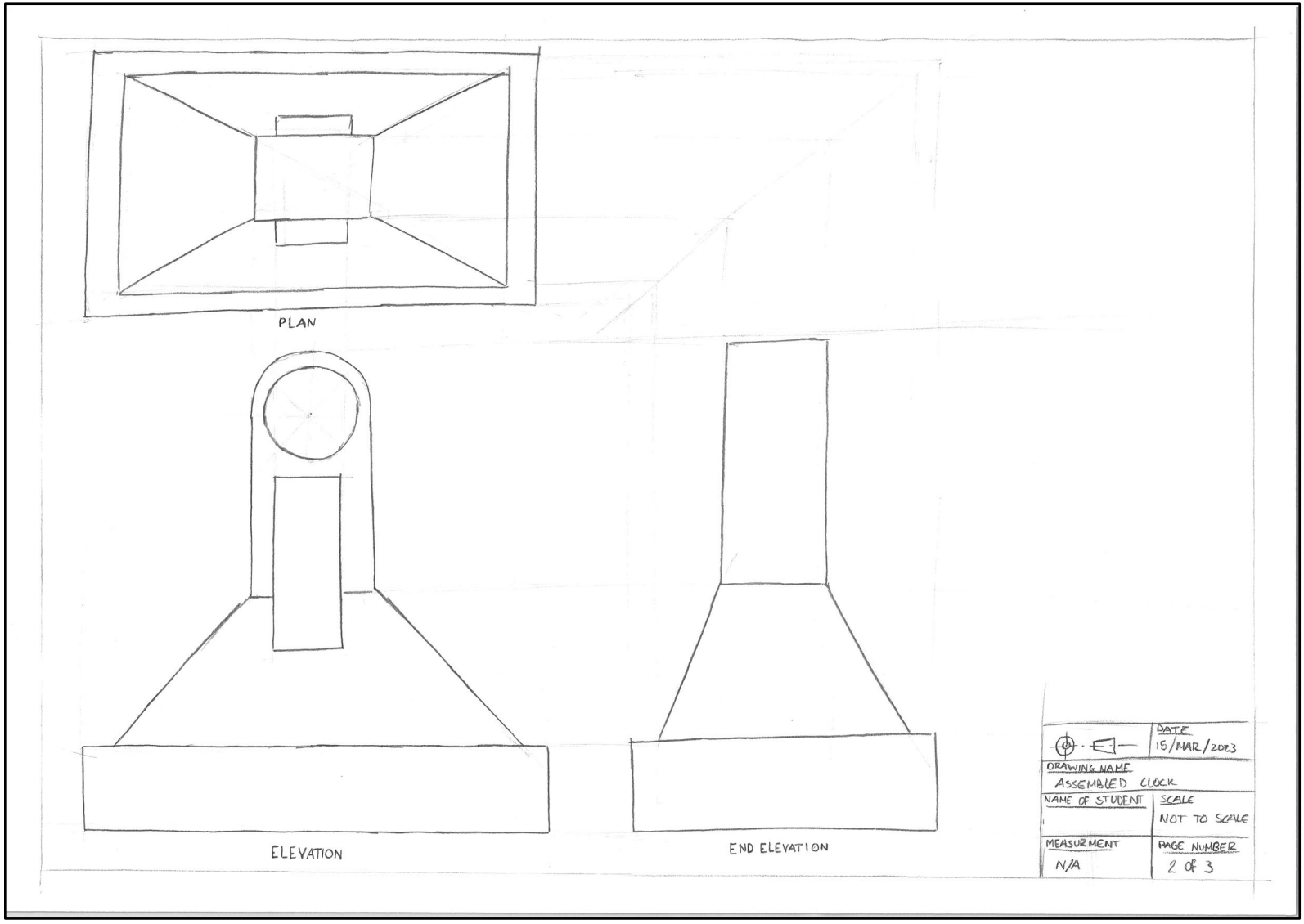
PLAN
ELEVATION
END ELEVATION
DATE
15/MAR/2023
DRAWING NAME
ASSEMBLED CLOCK
NAME OF STUDENT
SCALE
NOT TO SCALE
MEASURMENT
N/A
PAGE NUMBER
2 of 3

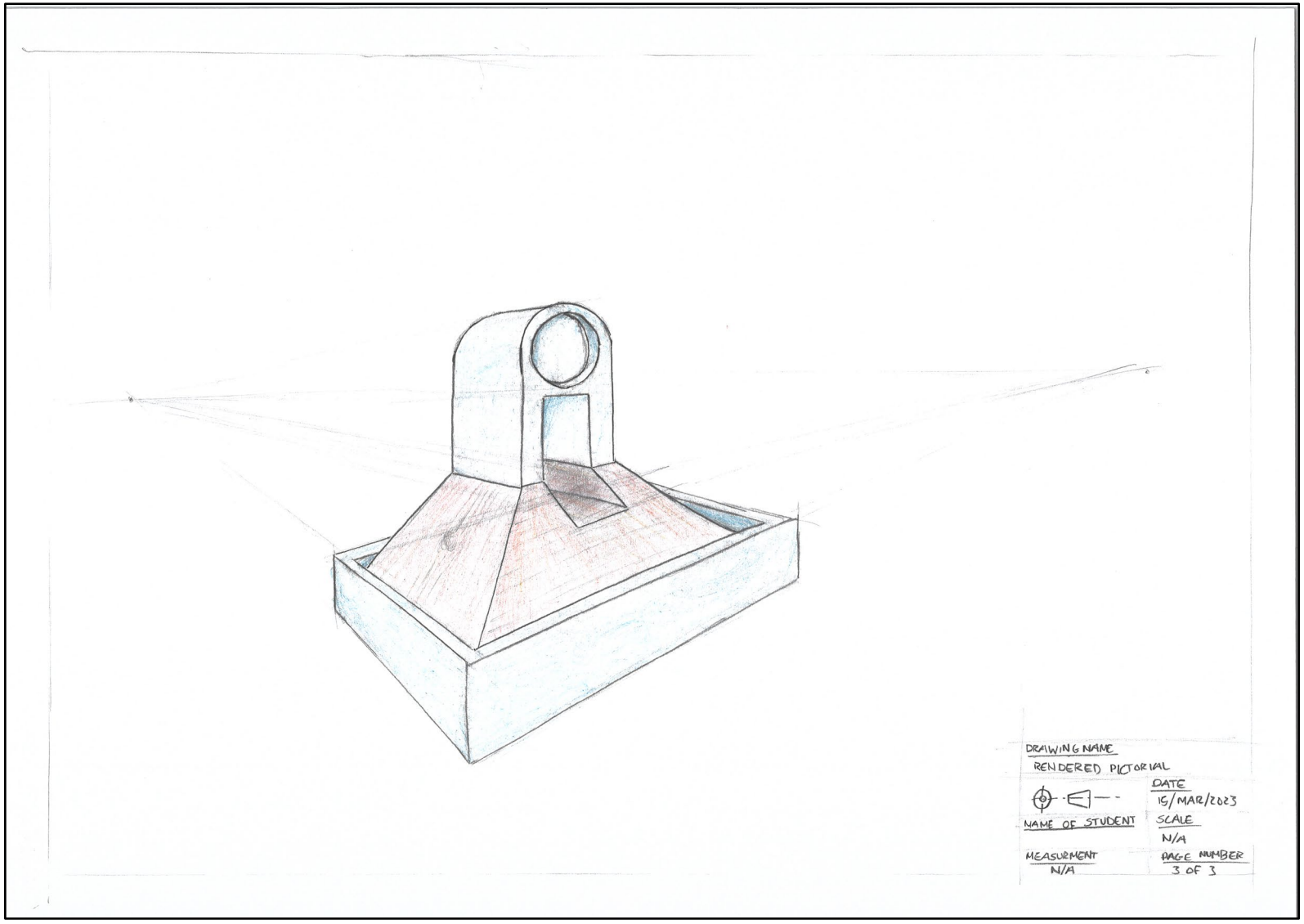
DRAWING NAME
RENDERED PICTORIAL
DATE
15/MAR/2023
NAME OF STUDENT
SCALE
N/A
MEASURMENT
N/A
PAGE NUMBER
3 OF 3

Candidate 6 evidence

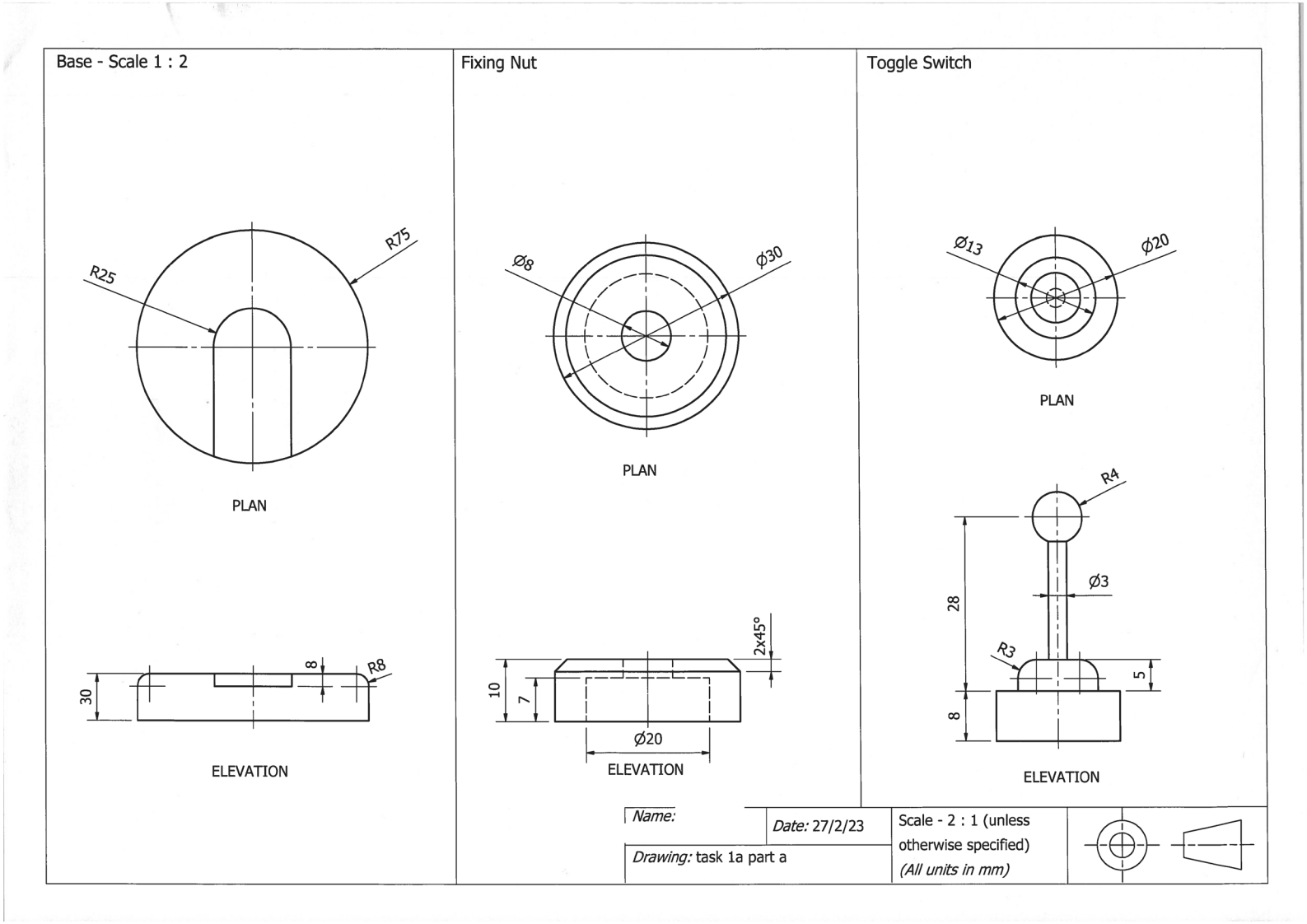

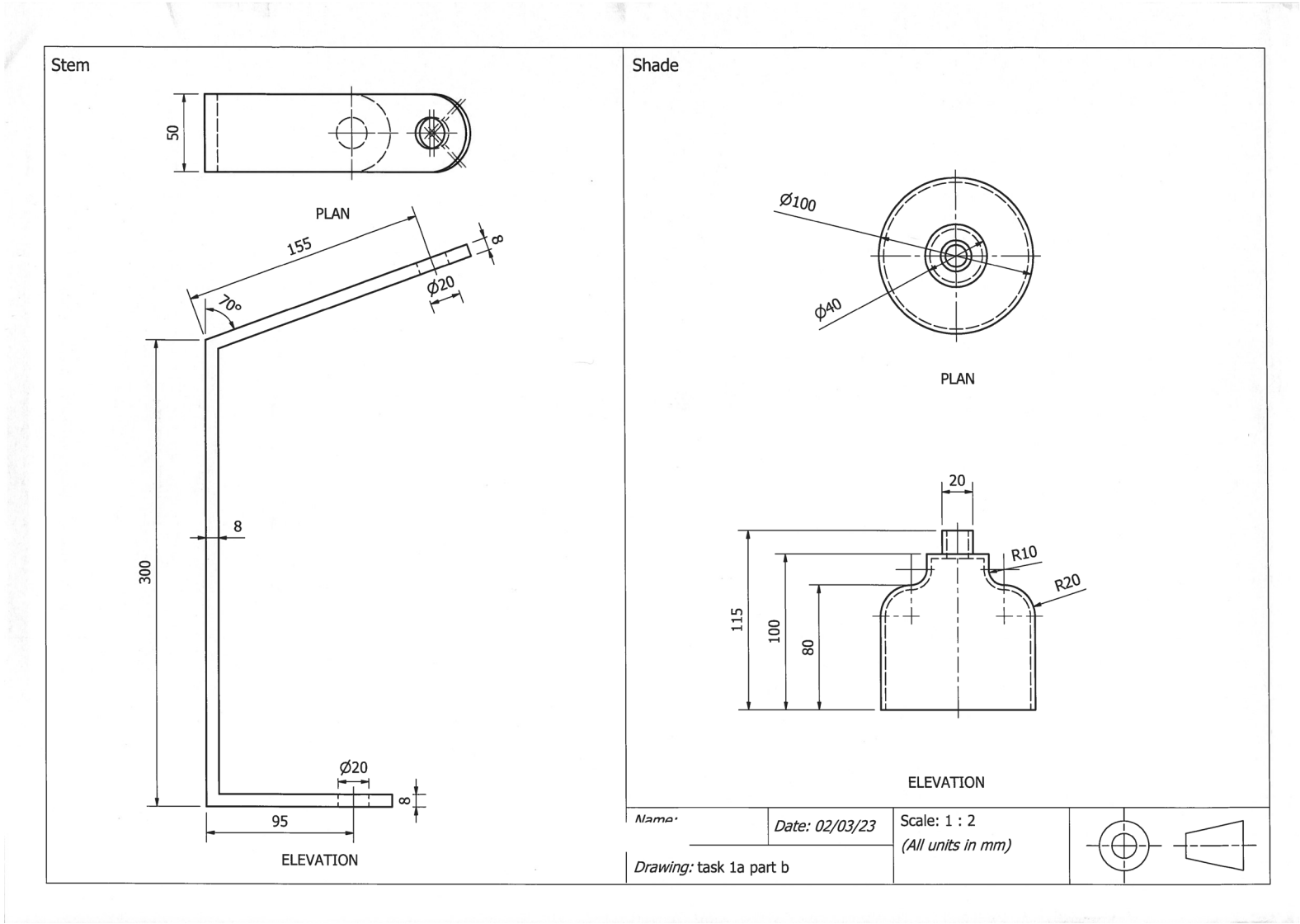
Stem
50
PLAN
155
8
70°
Ø20
300
8
Ø20
8
95
ELEVATION
Shade
Ø100
Ø40
PLAN
20
R10
R20
115
100
80
ELEVATION
Name:
Date: 02/03/23
Scale: 1 : 2
(All units in mm)
Drawing: task 1a part b

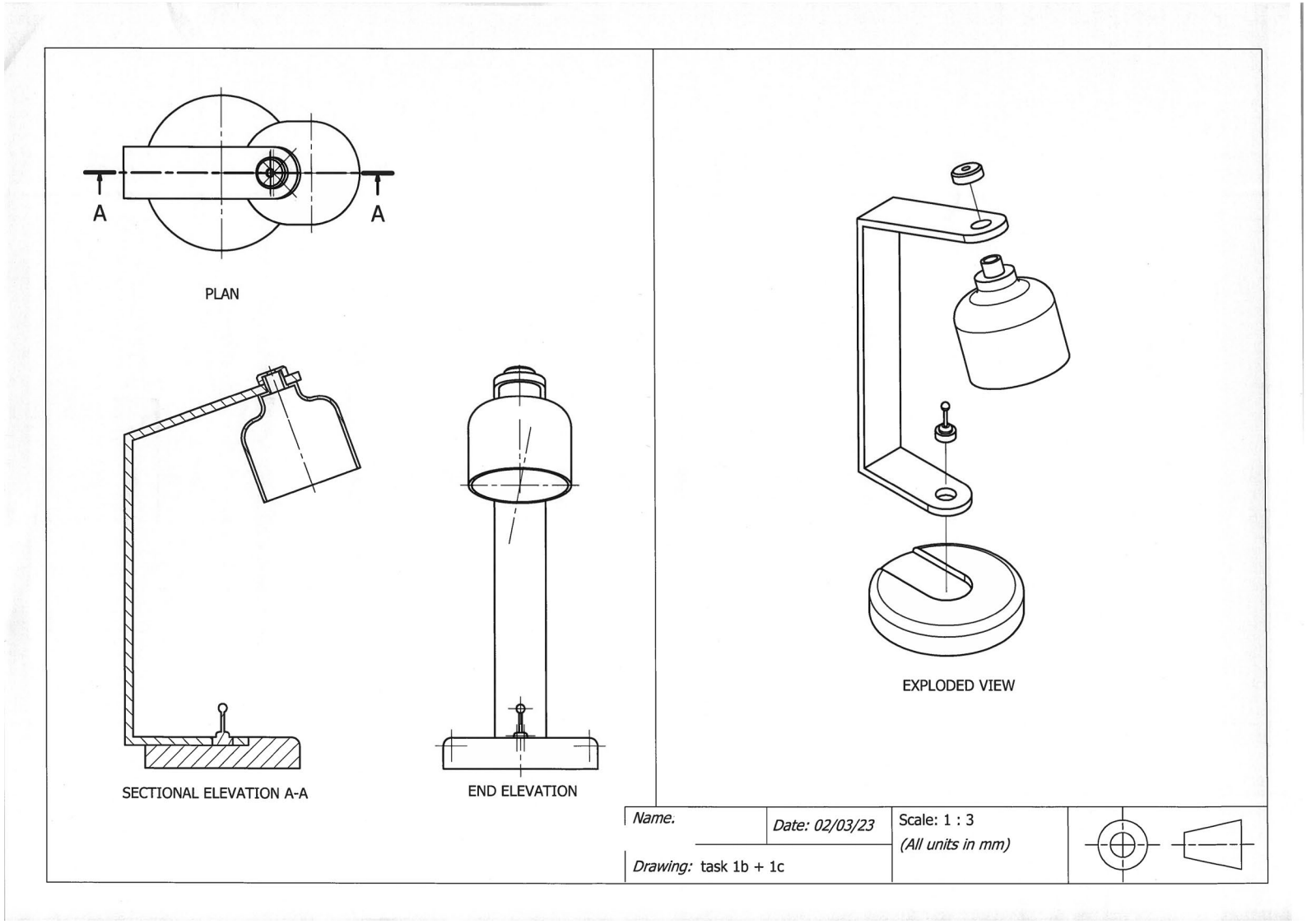
A
A
PLAN
SECTIONAL ELEVATION A-A
END ELEVATION
EXPLODED VIEW
Name.
Date: 02/03/23
Scale: 1 : 3
(All units in mm)
Drawing: task 1b + 1c

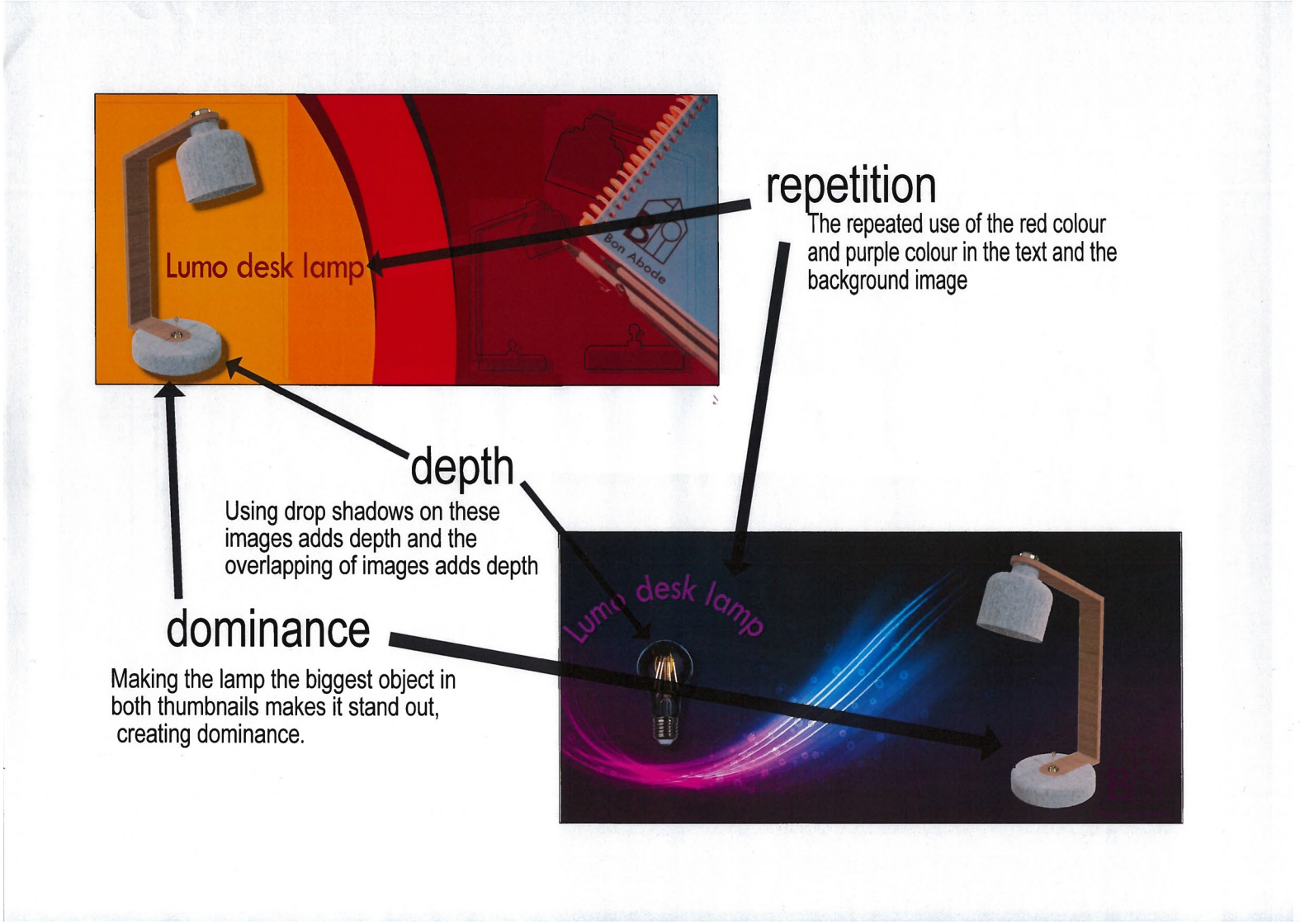
Lumo desk lamp
Bon Abode
repetition
The repeated use of the red colour and purple colour in the text and the background image
depth
Using drop shadows on these images adds depth and the overlapping of images adds depth
dominance
Making the lamp the biggest object in both thumbnails makes it stand out, creating dominance.
Lumo desk lamp

Dominance has been used in the layout by making the lamp the largest object on the page.
This makes the product stand out the most and draws the eye to it. This helps to create a high visual impact as the lamp is the first thing you see when you look at the layout.

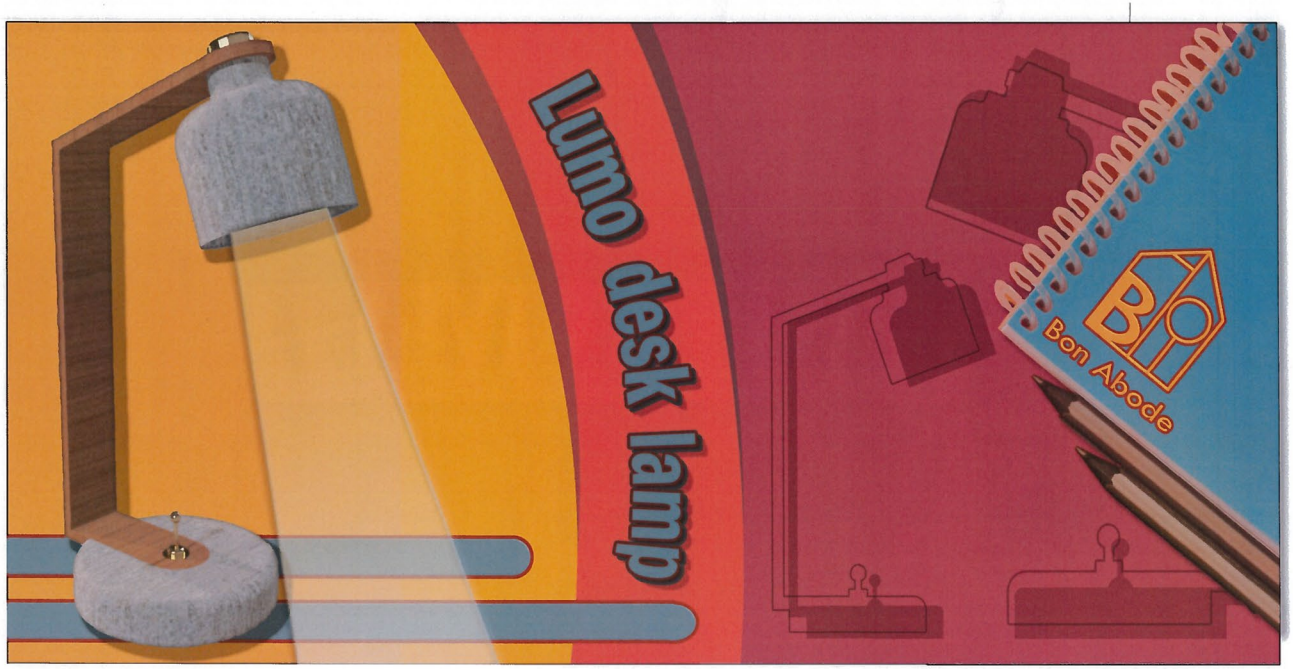

Unity and repetition have been used in the layout by repeating the colours of red, blue, and yellow in the text and background images. The usage of the primary colours creates a warm, playful atmosphere and repeating the colours adds harmony and brings the layout together.

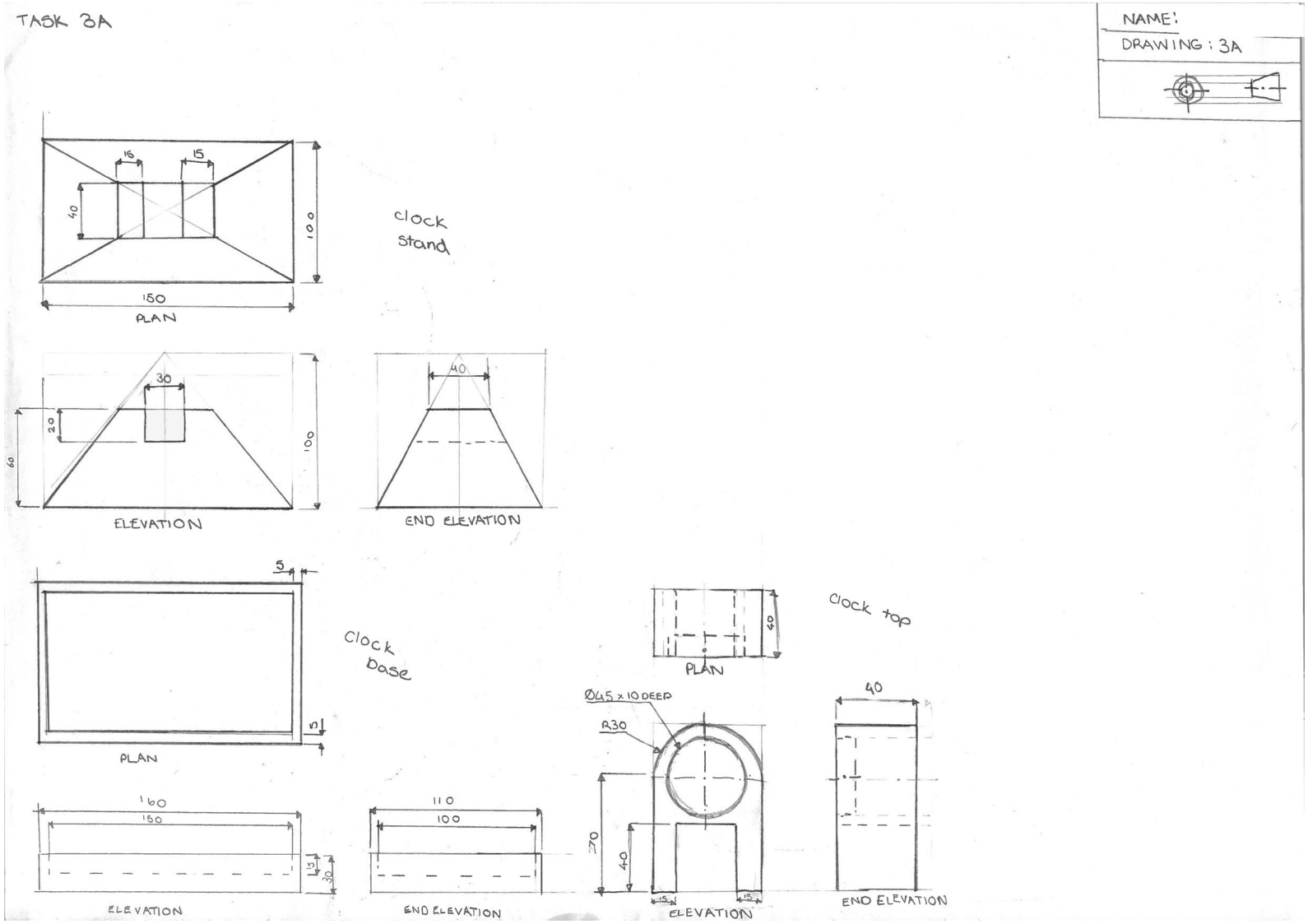
TASK 3A
NAME:
DRAWING : 3A
clock stand
PLAN
ELEVATION
END ELEVATION
clock base
PLAN
ELEVATION
END ELEVATION
clock top
PLAN
ELEVATION
END ELEVATION

TASK 3B

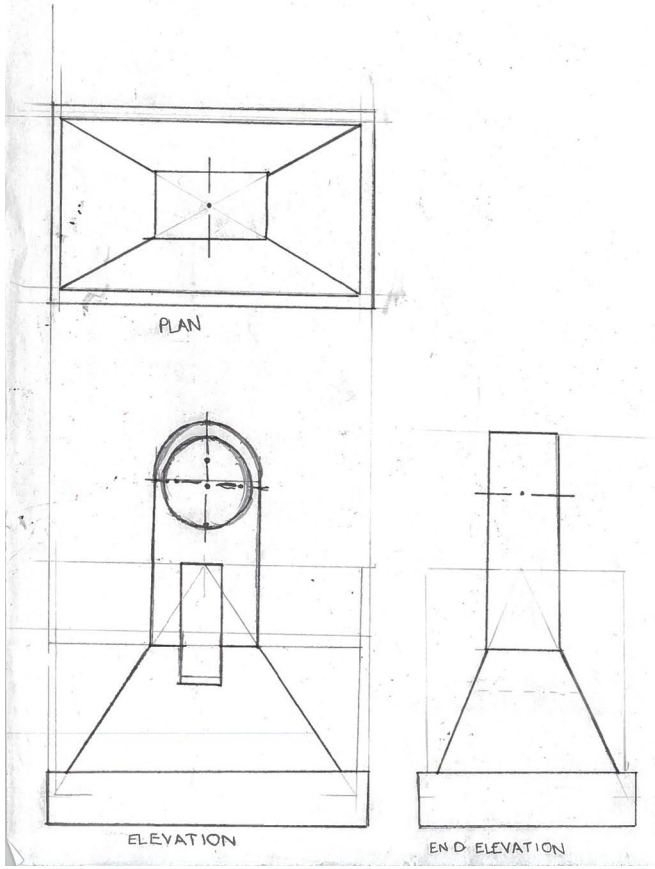

TASK 3C

NAME:

DRAWING : 3B / C

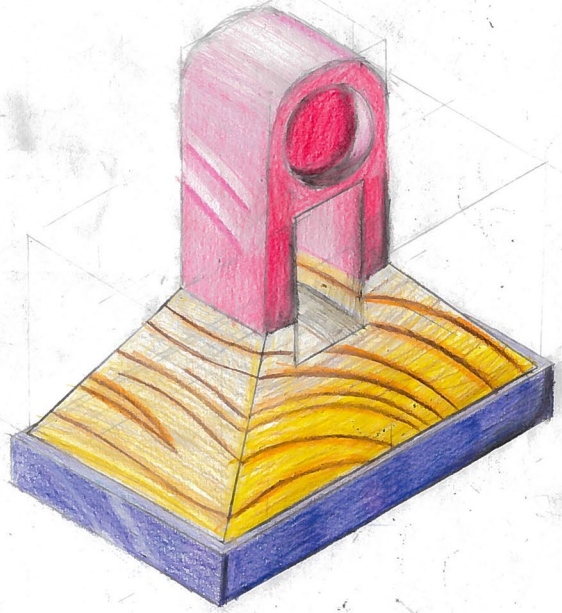

Candidate 7 evidence

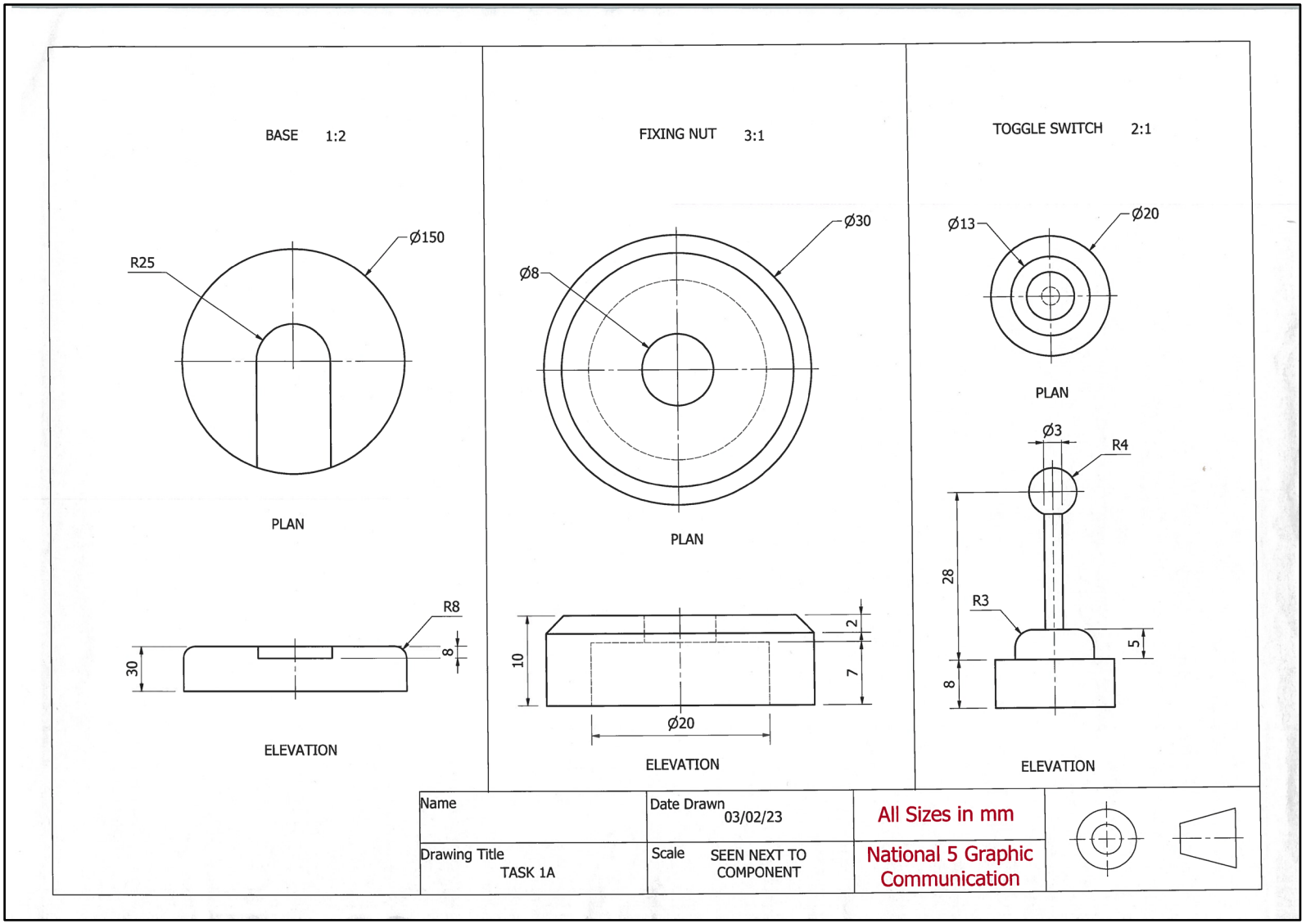

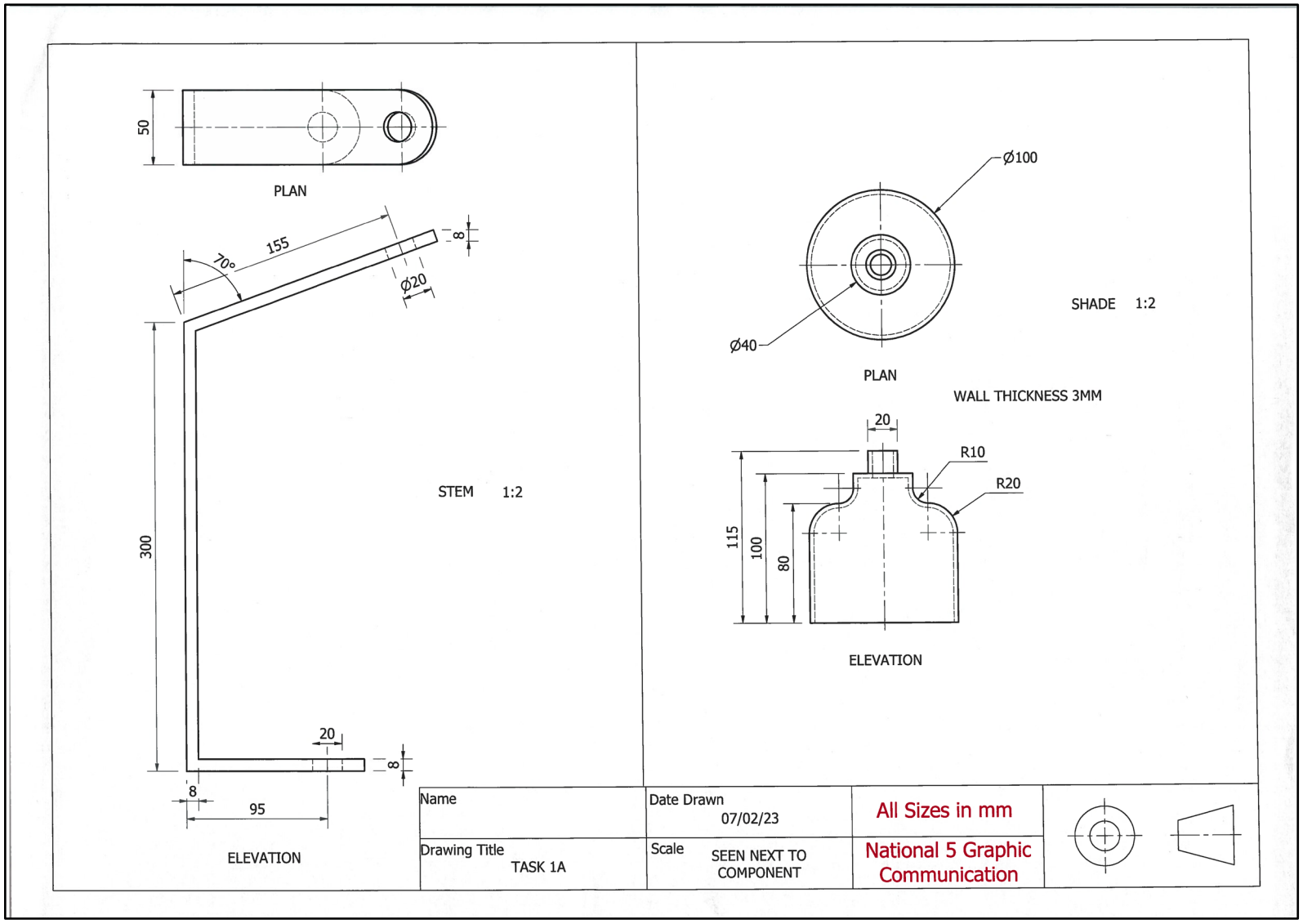
50
PLAN
155
70°
8
Ø20
300
STEM 1:2
20
8
8
95
ELEVATION
Ø100
Ø40
PLAN
SHADE 1:2
WALL THICKNESS 3MM
20
R10
R20
115
100
80
ELEVATION
Name
Date Drawn
07/02/23
All Sizes in mm
Drawing Title
TASK 1A
Scale
SEEN NEXT TO COMPONENT
National 5 Graphic Communication

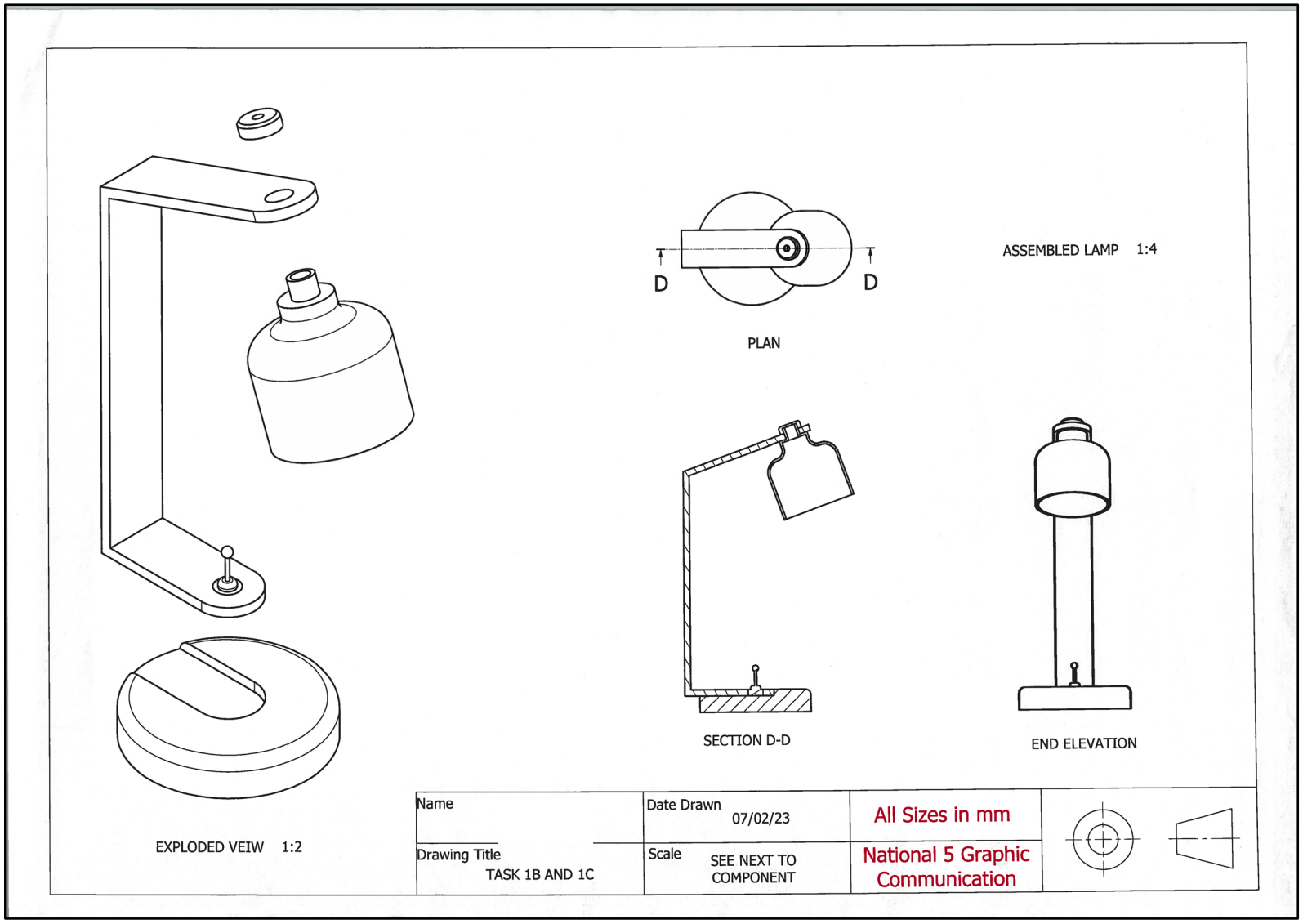
D
D
PLAN
ASSEMBLED LAMP 1:4
SECTION D-D
END ELEVATION
EXPLODED VEIW 1:2
Name
Date Drawn 07/02/23
All Sizes in mm
Drawing Title TASK 1B AND 1C
Scale SEE NEXT TO COMPONENT
National 5 Graphic Communication

Task 2a.

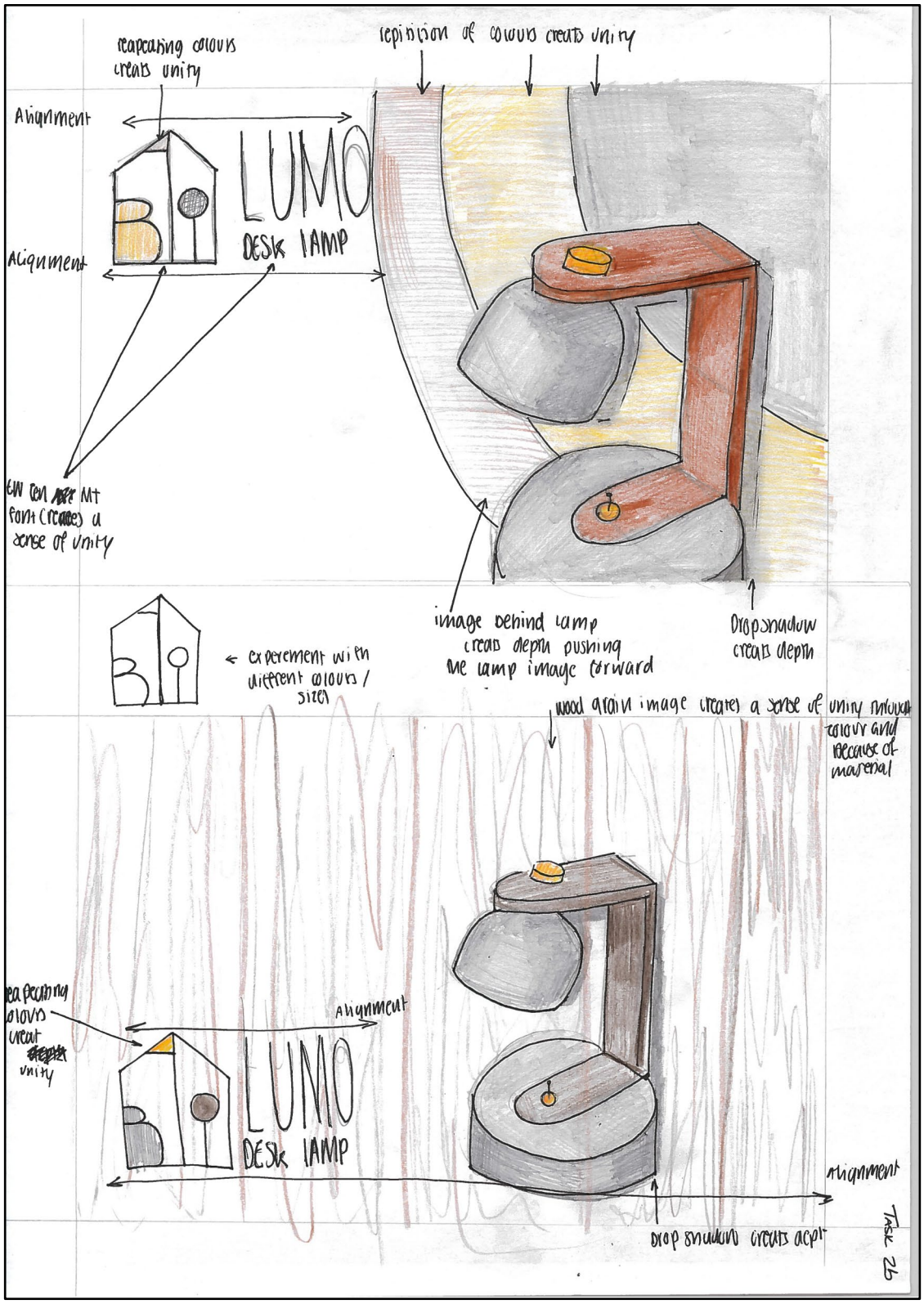
reapeating colours creats unity
repitition of colours creats unity
Alignment
LUMO
DESK LAMP
Aligniment
font (creates) a sense of unity
image behind lamp creats depth pushing the lamp image forward
Drop shadow creats depth
← experement with different colours / sizes
wood grain image creates a sense of unity through colour and because of material
reapeating colours creat unity
Alignment
LUMO
DESK LAMP
Alignment
drop shadow creats depth
Task 2b

Task 2C

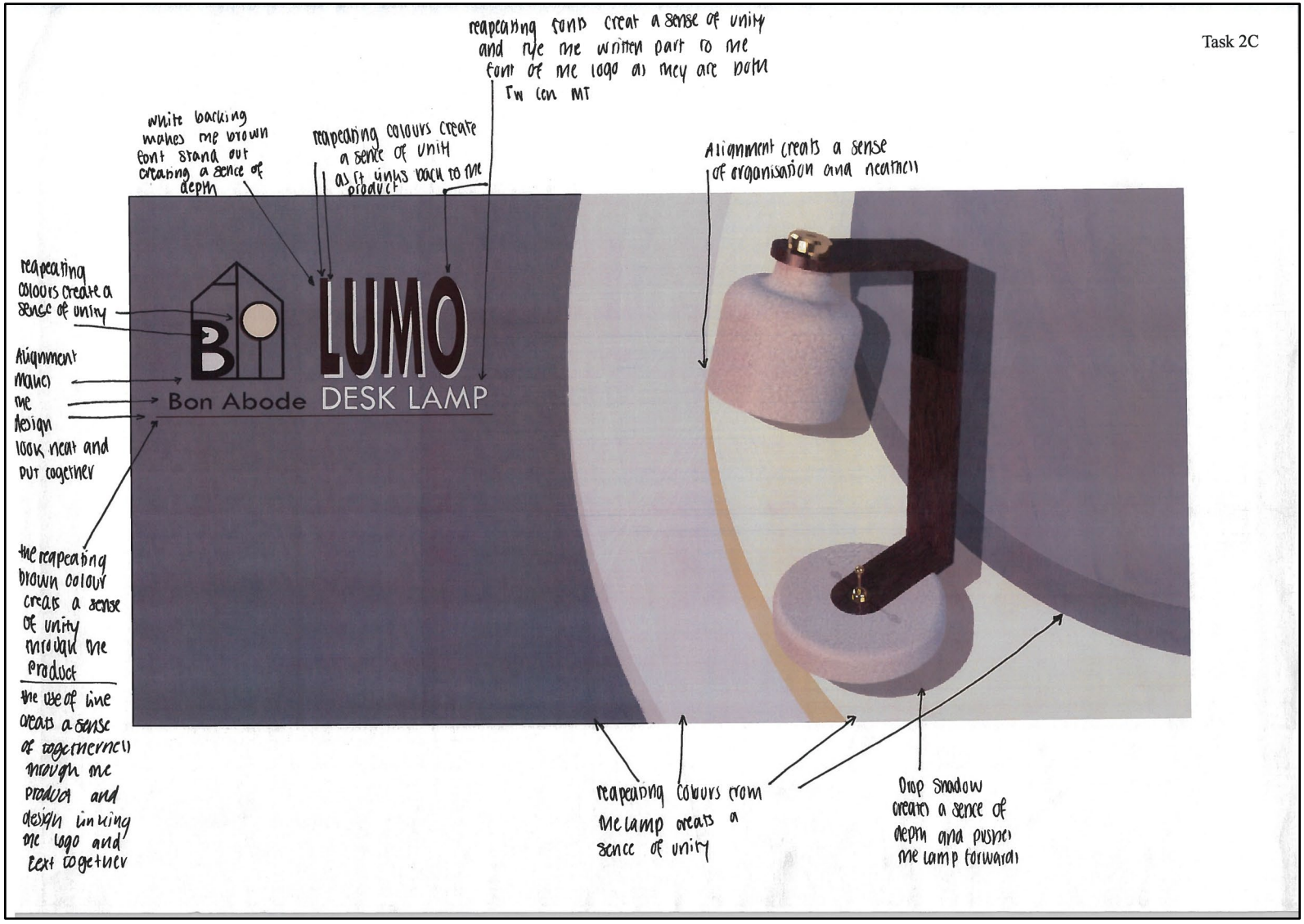
reapeating fonts creat a sense of unity and tye the written part to the font of the logo as they are both Tw Cen MT
white backing makes the brown font stand out creating a sence of depth
reapeating colours create a sence of unity as it links back to the product
Alignment creats a sense of organisation and neatness
reapeating colours create a sense of unity
Alignment makes the design look neat and put together
LUMO
Bon Abode DESK LAMP
the reapeating brown colour creats a sense of unity through the product
the use of line creats a sense of togetherness trough the product and design linking the logo and text togetuer
reapeating colours from the lamp creats a sence of unity
Drop Shadow creates a sence of depth and pushes the lamp forward

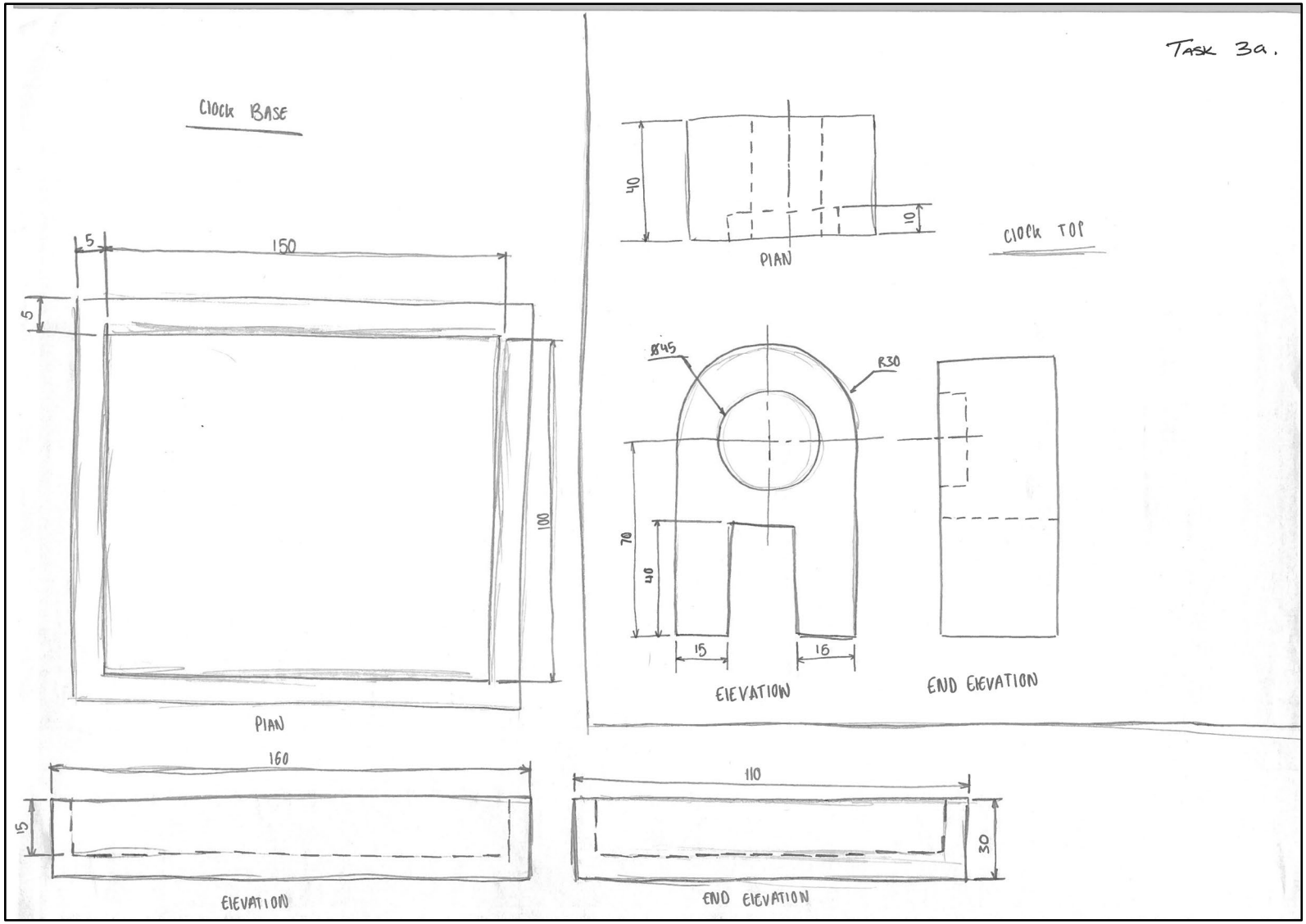
Task 3a.
CLOCK BASE
5
150
5
100
PLAN
160
15
ELEVATION
110
30
END ELEVATION
40
10
PLAN
CLOCK TOP
Ø45
R30
70
40
15
16
ELEVATION
END ELEVATION

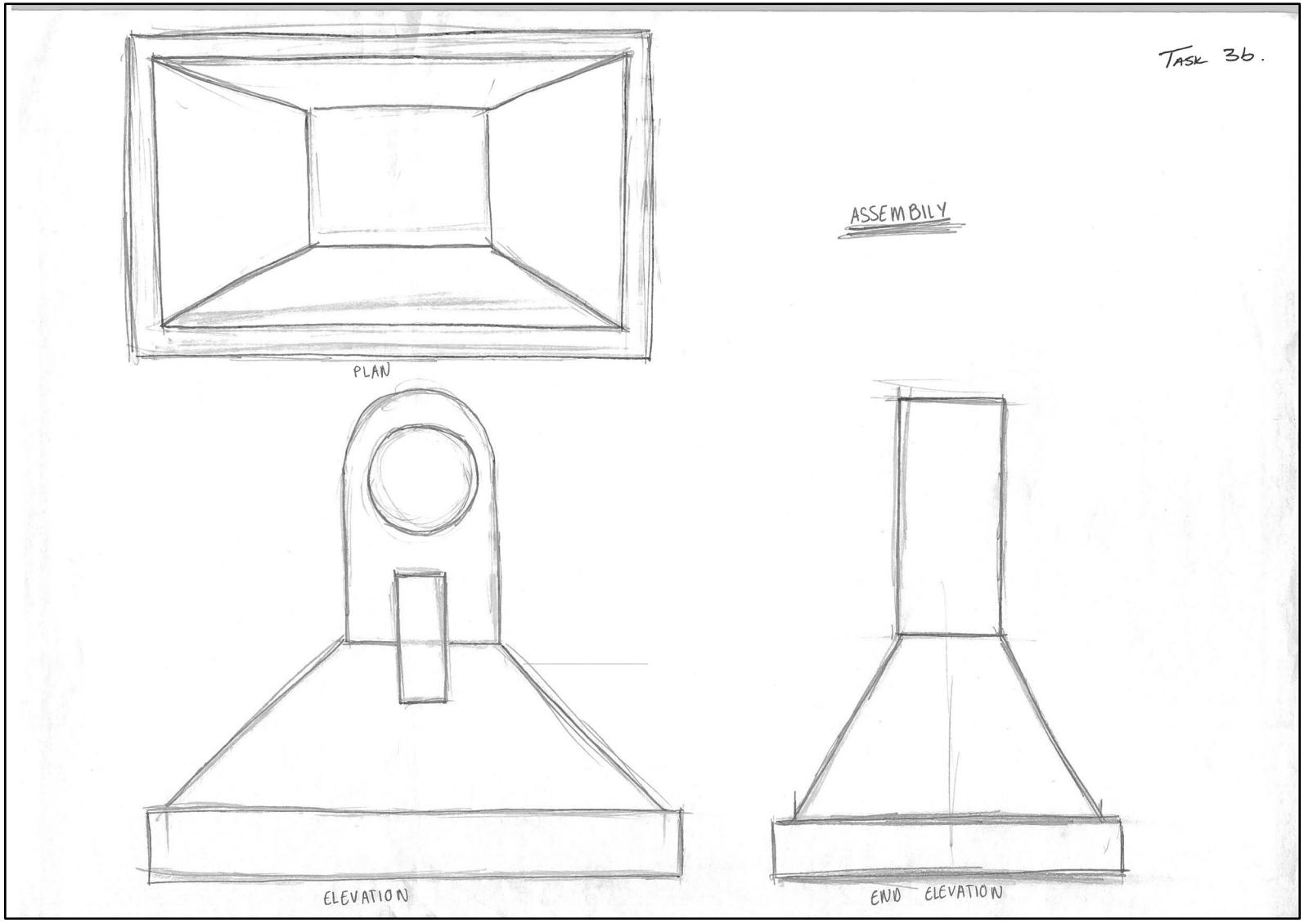
TASK 3b.
ASSEMBLY
PLAN
ELEVATION
END ELEVATION

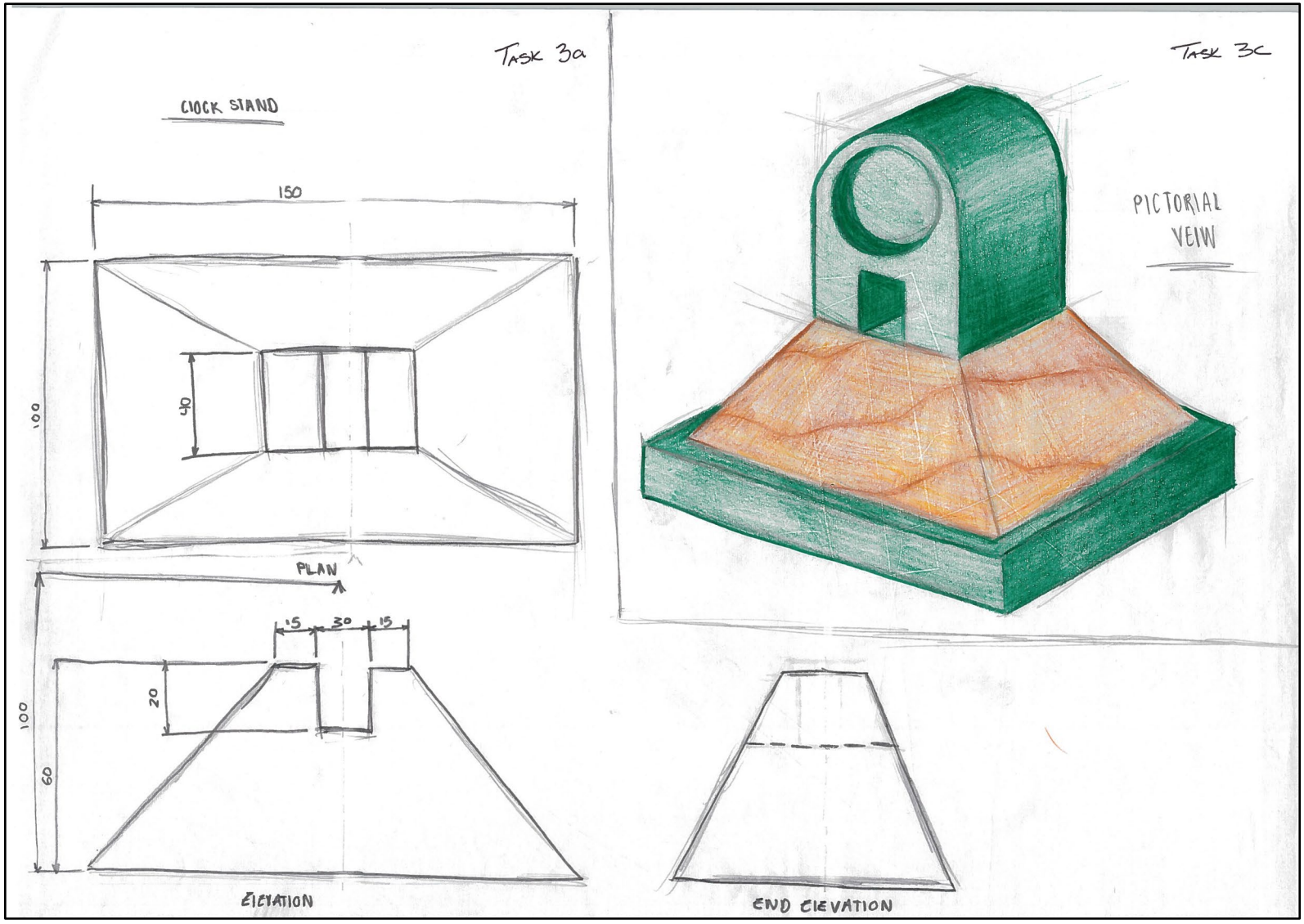
TASK 3a
CLOCK STAND
150
100
40
PLAN
15
30
15
20
100
60
ELEVATION
TASK 3c
PICTORIAL VEIW
END ELEVATION

Candidate 8 evidence

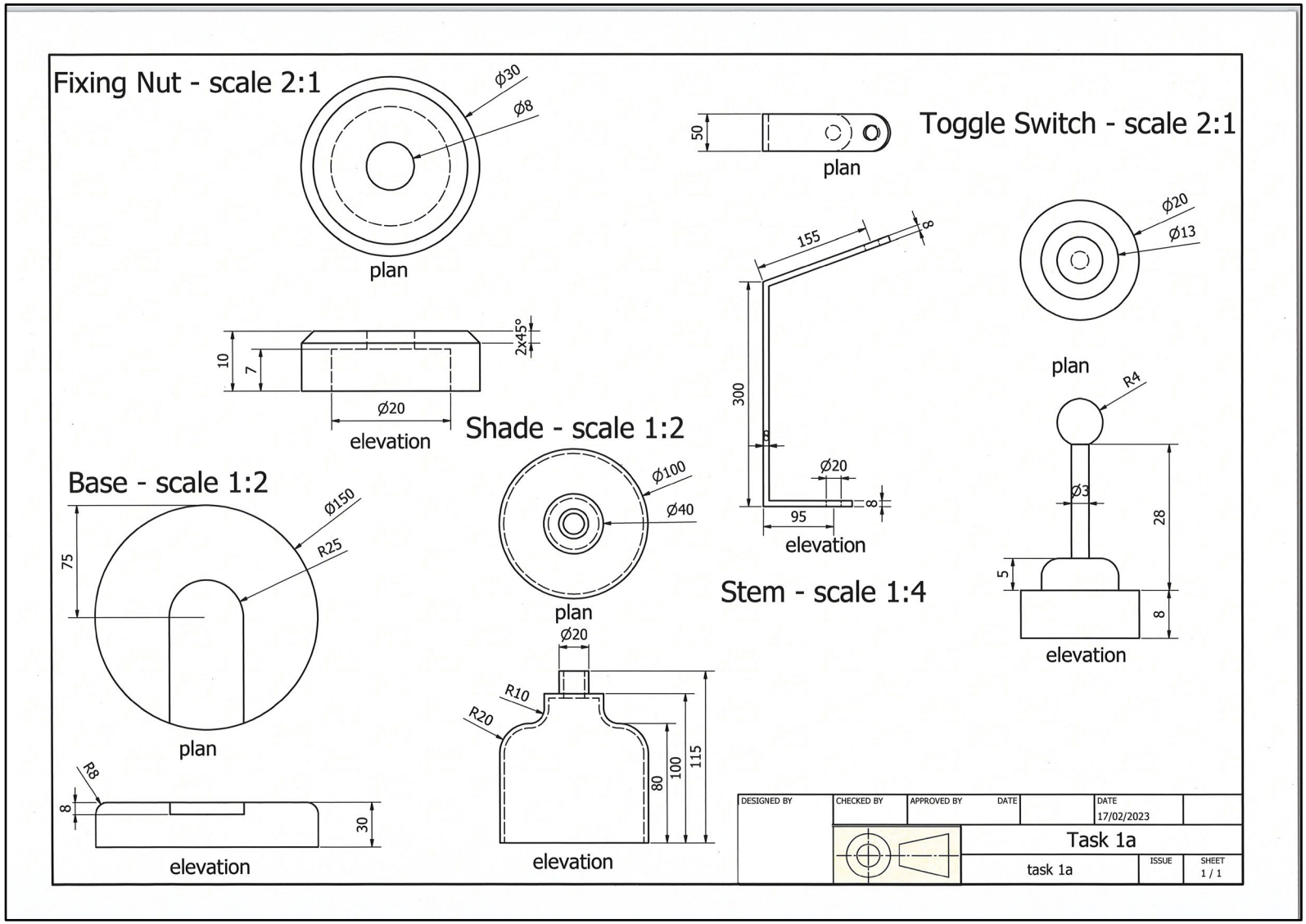

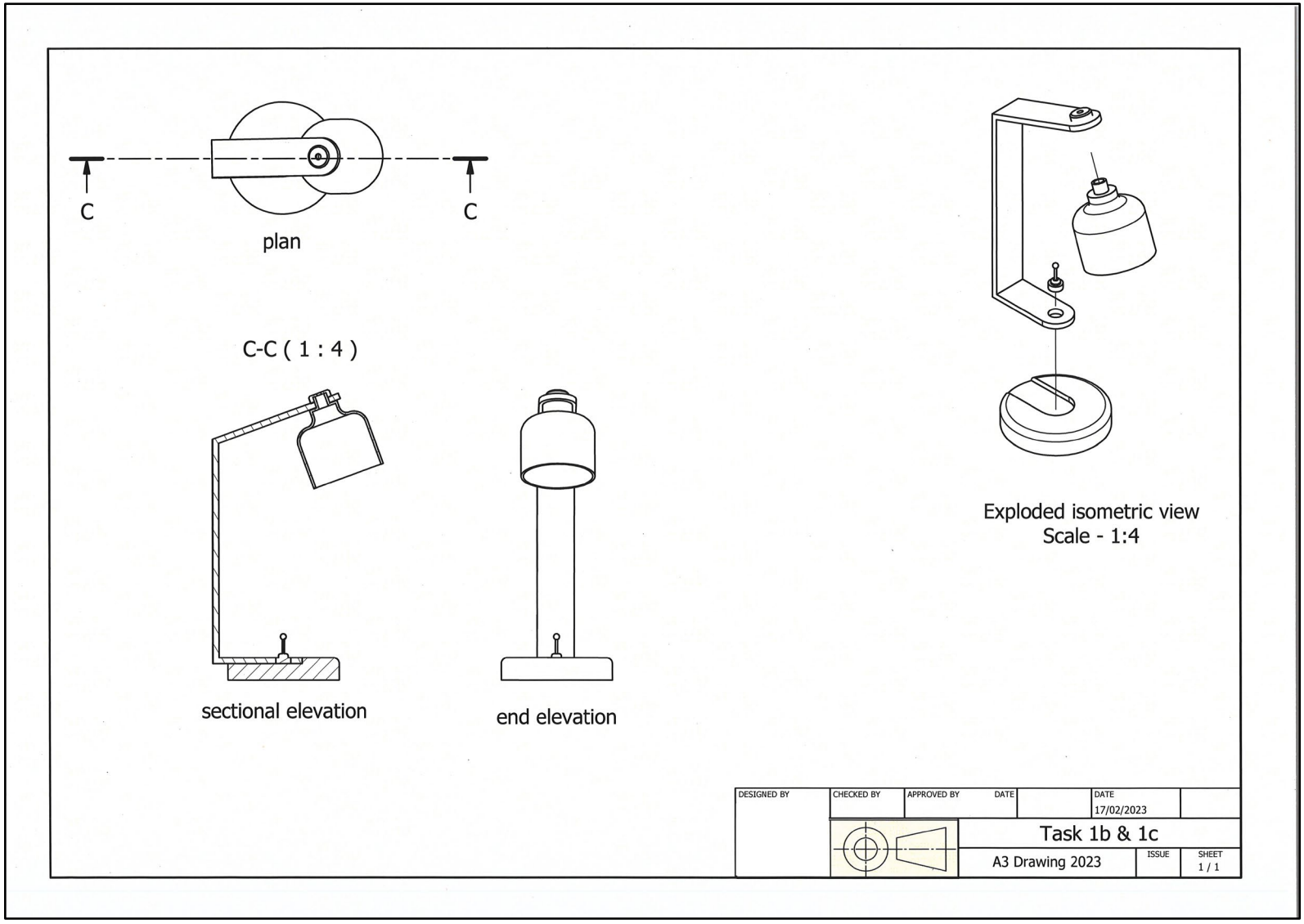
C
C
plan
C-C (1 : 4)
sectional elevation
end elevation
Exploded isometric view
Scale - 1:4
DESIGNED BY
CHECKED BY
APPROVED BY
DATE
DATE
17/02/2023
Task 1b & 1c
A3 Drawing 2023
ISSUE
SHEET
1 / 1

Task 2a

TASK 2B

Depth - is shown where the title is on top of a rectangle.

Depth - is shown where the lamp is on top of the picture.

Depth

TASK 2C

Depth - depth is shown where the title is in front of the background it allows the title to stand out.

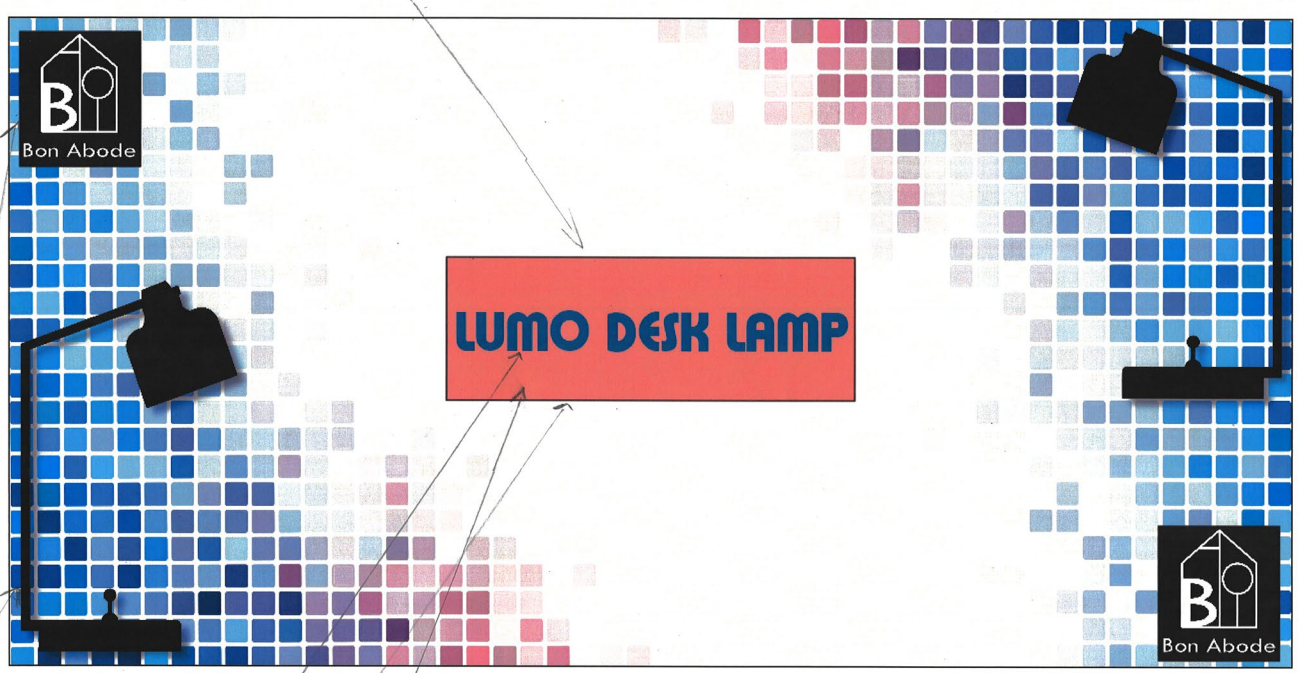

Alignment - alignment is used with the lamp and the black rectangle as they are both aligned to the left. This helps the graphic look more organised.

Contrast - contrast is used with the title and the rectangle background behind it, this adds interest to the page making the title more eye catching and directing the reader to it.

Shape - shape has been used with the rectangle behind the title, it helps create depth and emphasises the title.

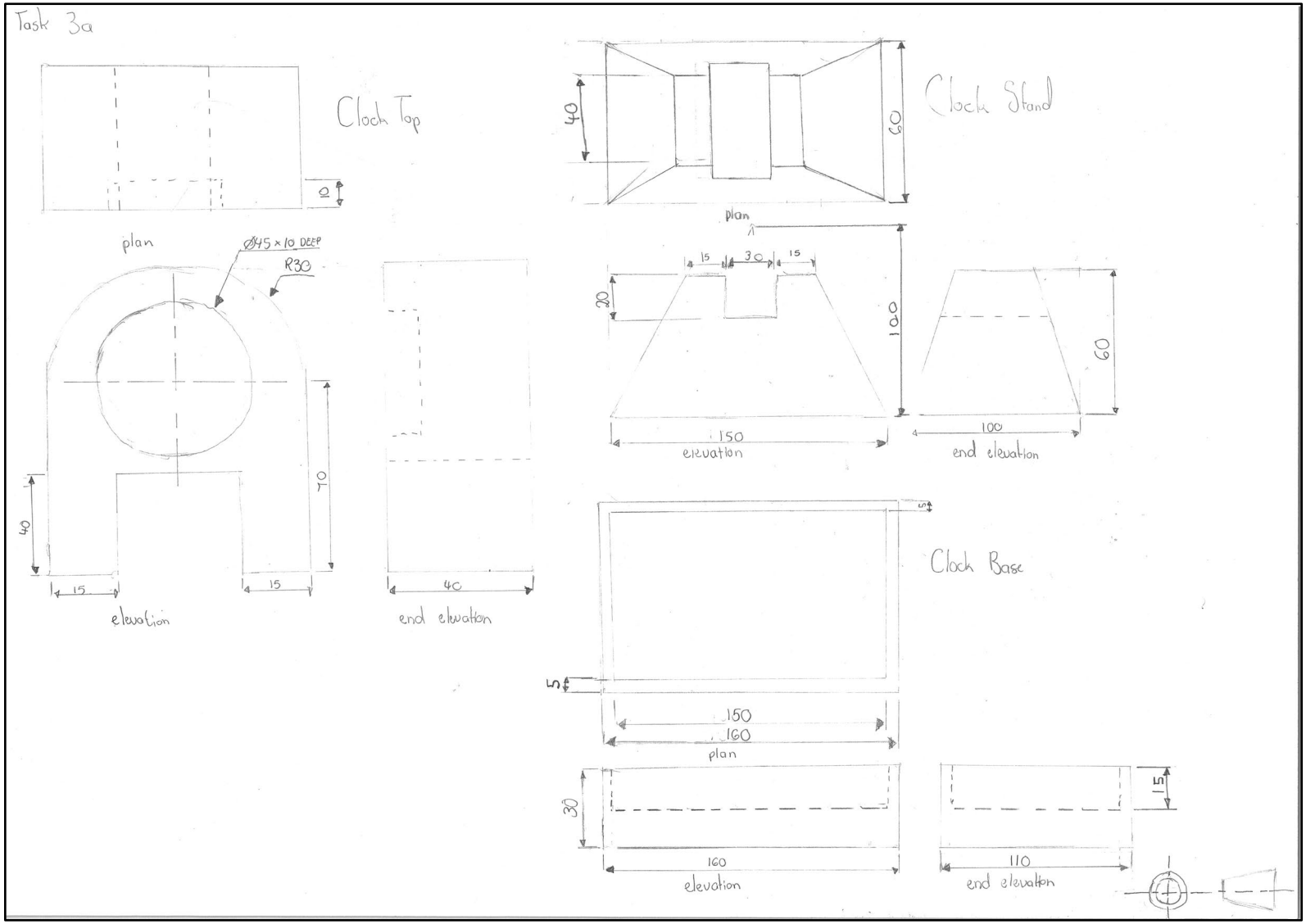
Task 3a
Clock Top
plan
Ø45 x 10 DEEP
R30
10
40
15
15
elevation
40
end elevation
Clock Stand
40
60
plan
15
30
15
20
100
150
elevation
60
100
end elevation
Clock Base
5
150
160
plan
30
160
elevation
15
110
end elevation

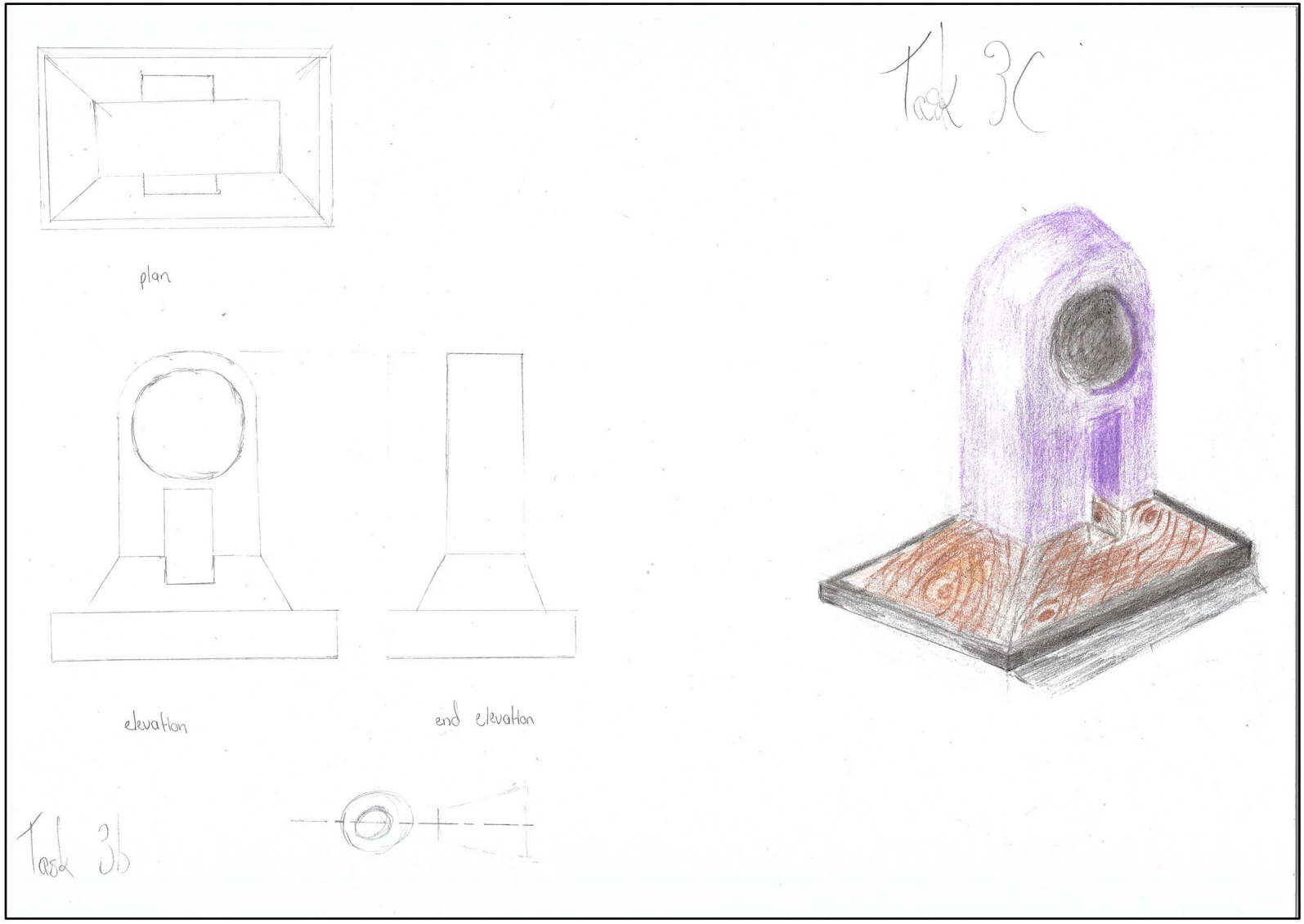
plan
elevation
end elevation
Task 3b
Task 3c